PROFIBUS • PROFINET
NORTH AMERICA

PROFINET vs. EtherNet/IP

Presentation downloadable from www.us.profinet.com/PxC

Carl Henning
PI North America

PROFI Interface Center
PROFINET & PROFIBUS

Discussion, not lecture

Agenda

- The Organization
  - Global support
- Breadth of Application Coverage
  - Factory (discrete), process, and motion
- Depth of features
  - Determinism, diagnostics, PROFIenergy, PROFIsafe, I-Device, Shared Device, wireless, etc.
- Leadership
  - Pioneered safety and many other Industrial Ethernet aspects
- Resources

The Organization: PROFINET

Belgium
RPA, PICC, PITC

France
RPA, PICC, PITC

Netherlands
RPA, PICC, PITC, PITL

Canada
PICC, PITC

Sweden
RPA, PICC

Czech Rep.
RPA, PICC, PITC, PITL

Germany & Austria
RPA, PICC PITC, PITL

Norway
RPA, PICC, PITC

Slovakia
RPA

Switzerland
RPA, PICC, PITC

Denmark
RPA

Ireland
RPA, PICC, PITC

Poland
RPA, PICC, PITC

Spain
RPA, PICC, PITC

UK
RPA, PICC, PITC

Finland
RPA

Italy
RPA, PICC, PITC

China
RPA, PICC, PITL

India
RPA, PICC

Japan
RPA, PICC, PITL

Brazil
RPA, PICC, PITC

Korea
RPA, PICC

Chile
RPA, PICC, PITC

Middle-East / UAE
RPA, PICC

USA
RPA, PICC, PITC, PITL

South-East-Asia
RPA

Lebanon
PICC

Southern Africa
RPA, PICC, PITC

Australia/ New Zealand
RPA, PICC, PITC

Saudi Arabia
PICC, PITC

PI worldwide:

27 Regional PI Associations (RPA)
1,487 Members

PI Technical Support:

53 PI Competence Centers (PICC)
28 PI Training Centers (PITC)
10 PI Test Laboratories (PITL)

Certified

The Organizations

	PI	ODVA
Regional Associations	27	4
Members	1,487	300
Training centers	28	1
Test labs	10	4
Competence Centers	53	0

- Broad international support matters if
  - You ship products globally
  - You ship machines globally
  - You build plants globally
- PI certification of PICCs, PITCs, & PITLs
  - Quality of Service agreements with PI
  - Audited by PI

The Organizations: Activities

	PI	ODVA
Newsletter subscribers	130,000	no
Member Newsletter	yes	no
Twitter accounts	3	0
YouTube channels	3	0
Facebook pages	3+	0
LinkedIn groups	3	0
Webinars	yes	no
Blog	yes	no
Training Classes*	16	0
Certified Training Classes*	8	0
Certified Engineers*	1,000	0
*US Only		

The Organizations: Cooperation

- PI
  - Works with NAMUR for process
  - Works with AIDA for automotive
  - Started Wireless Cooperation with FF and HART
  - Launched FDI (Field Device Integration) with FF, HART, OPC, FDT
  - Incubated IO-Link
  - Absorbed Interbus
- ODVA
  - Some relationships with SERCOS and Modbus

PI markets

- Process
  - Oil and gas
  - Water/wastewater
  - Pharma
- Factory
  - Automotive
  - Logistics
  - Other discrete manufacturing

Industry 4.0, IoT, IIoT, …

It’s all about the data

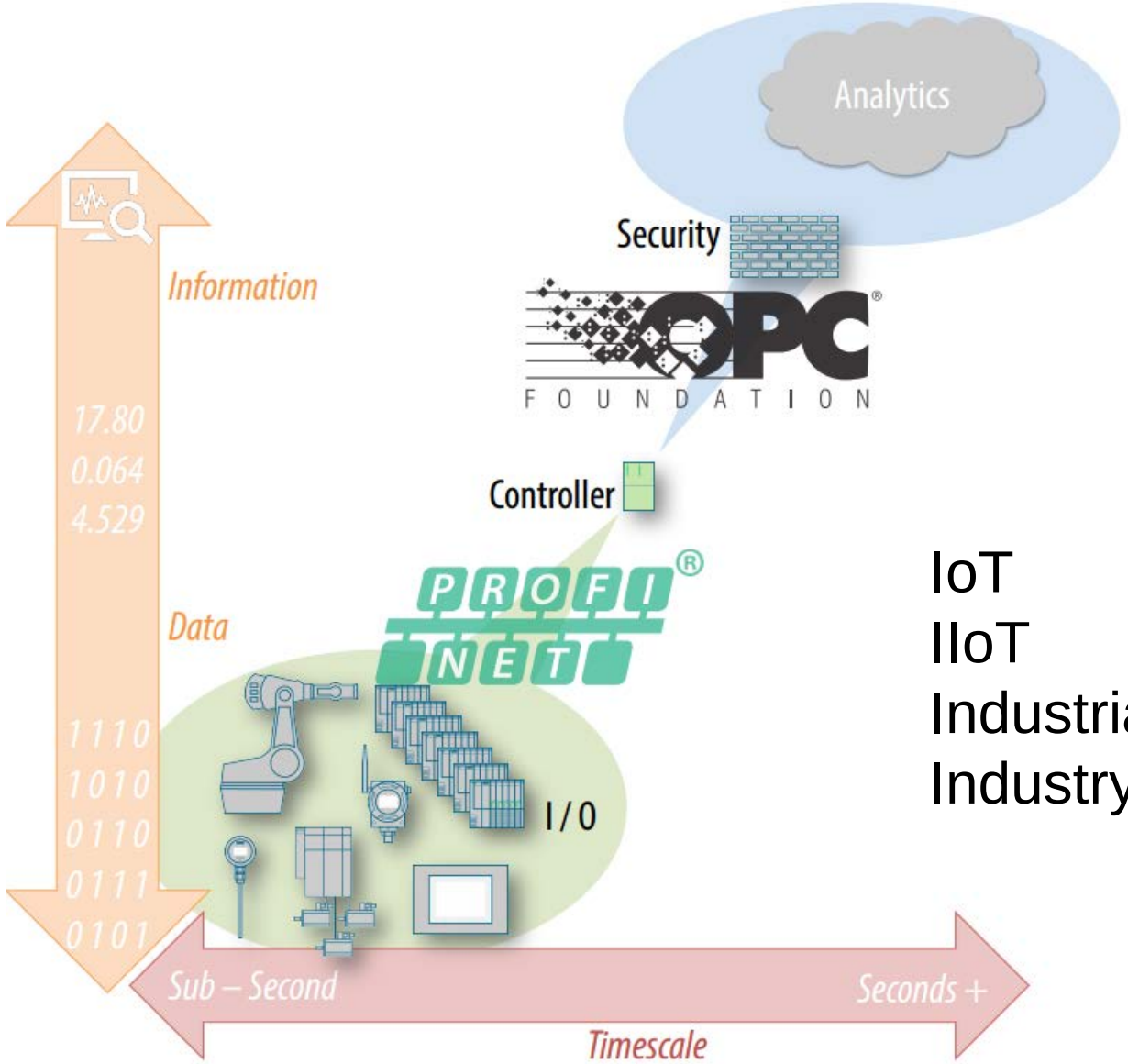

IoT
IIoT
Industrial Internet
Industry 4.0

more

The road to IIoT

Evolution NOT Revolution

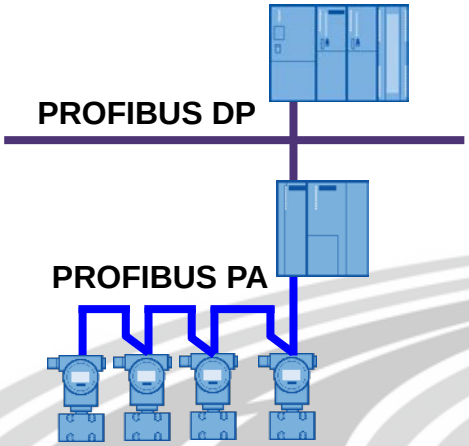

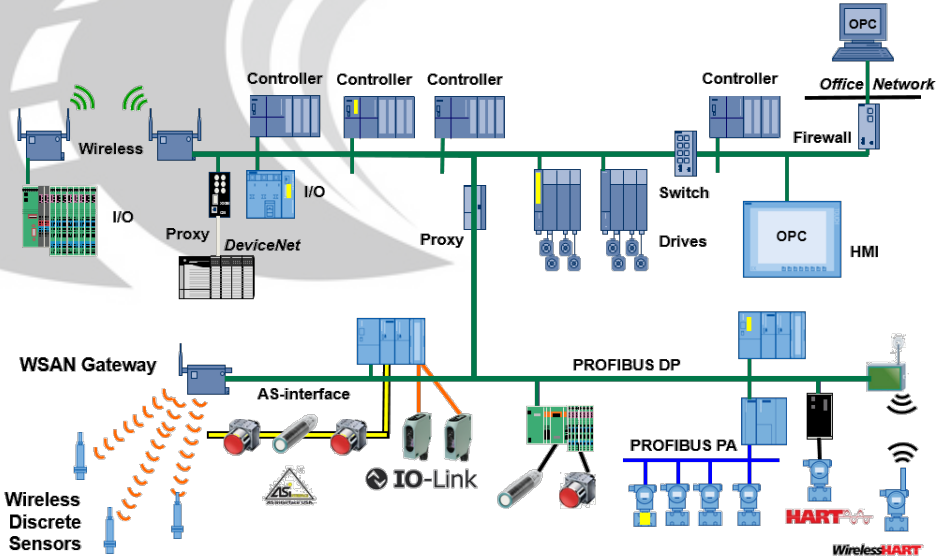

Breadth of Application Coverage

- Factory – both
- Process – both, but…
  - Non-intrinsically safe instruments, EIP has more
  - Intrinsically safe, both rely on PROFIBUS PA (or Foundation Fieldbus)
  - PROFINET uses proxies to integrate others
- Motion
  - PI has had PROFIdrive for decades
    - First for PROFIBUS, then PROFINET
  - ODVA has CIPmotion and SERCOS III

Competitive comparison: discrete IO

Technology	PROFINET	EtherNet/IP	Modbus TCP
Communication Model	Provider-Consumer	Provider-Consumer	Client-Server
Real-time Protocol Options	IEEE 802.3 (Layer 2) primary, UDP/IP option, TCP/IP option	UDP/IP (Layer 4)	TCP/IP (Layer 4)
Jitter with IO	++ (low)	- (high)	-- (higher)
Protocol Standard	IEC 61158	IEC 61158	IEC 61158
Transmission Type	Unicast primary, Multicast optional	Multicast primary, Limited Unicast	Unicast only
Device Names	Mandatory	Optional	Optional
COTS switch possible?	Yes	Not recommended	Yes
Switch requirements	100Mbit/s or faster, full duplex for IO traffic	Full Duplex IGMP Snooping, One IGMP Query, Wire speed For IO traffic	No special requirements
IP Address Assignment	Automatic w/ PN DCP DHCP optional	DHCP and Managed	DHCP and Managed

PROFINET in Process

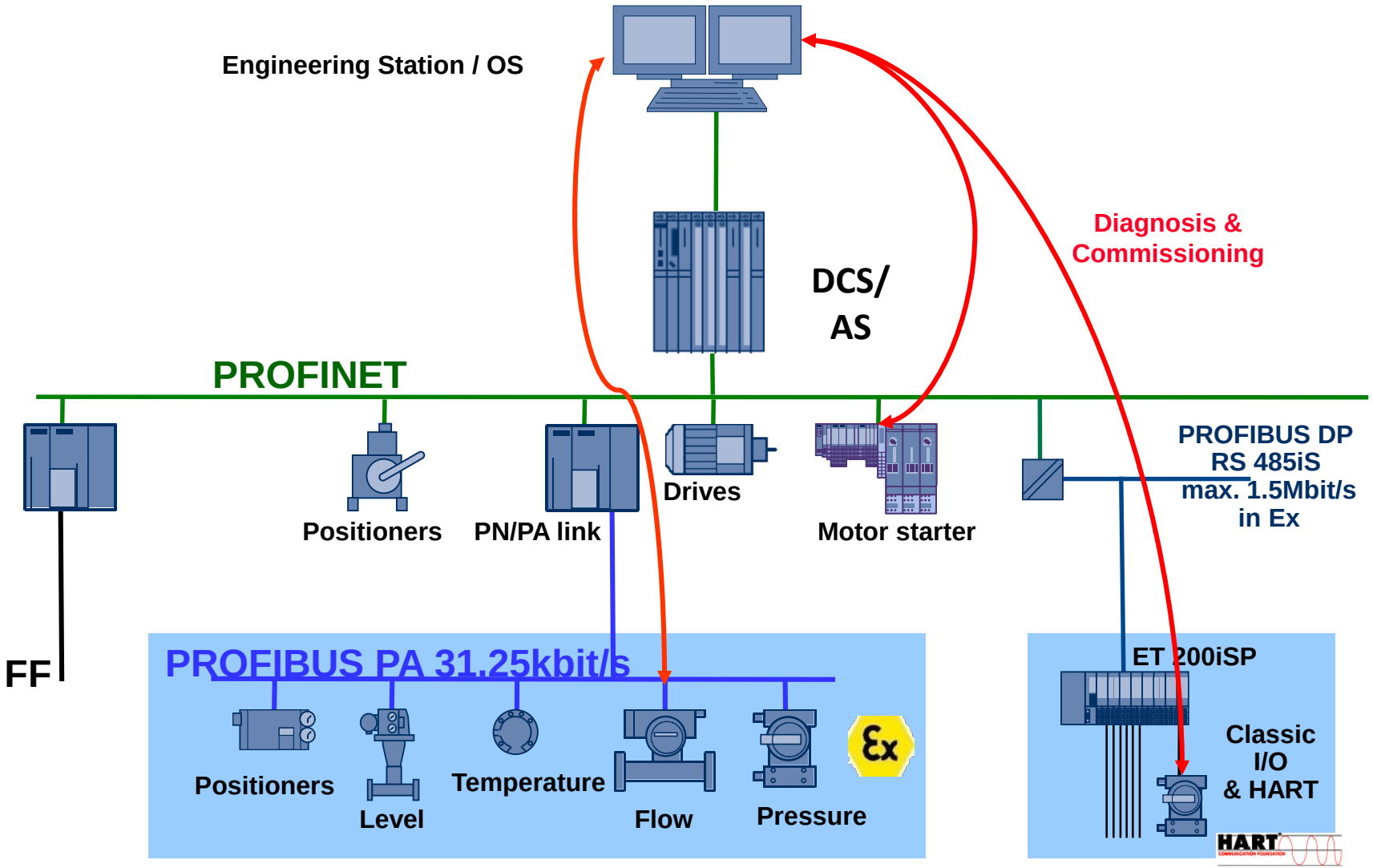

Transparent access to diagnostic and commissioning data

Competitive comparison: process

Technology	PROFINET	EtherNet/IP	Modbus TCP
Media (Network) Redundancy	Yes SP, RSP, PN MRP, bumpless IRT, vendor specific	Yes SP, RSP, DLR, vendor specific	Yes SP, RSP, vendor specific
Bumpless Redundancy	Yes	No	No
Controller Redundancy	Yes	Not on EtherNet/IP, Only with additional ODVA networks and hardware	No
Device Redundancy	Yes	No	No
PROFINET for PA (Process Automation)	Yes	No	No
Fieldbus Integration	Many, including non PI networks (PROFIBUS, Interbus, ASI, DeviceNet, Foundation Fieldbus, Modbus, Hart, etc.)	CompoNet, DeviceNet, ControlNet, Modbus TCP	Modbus

Motion Control Topology

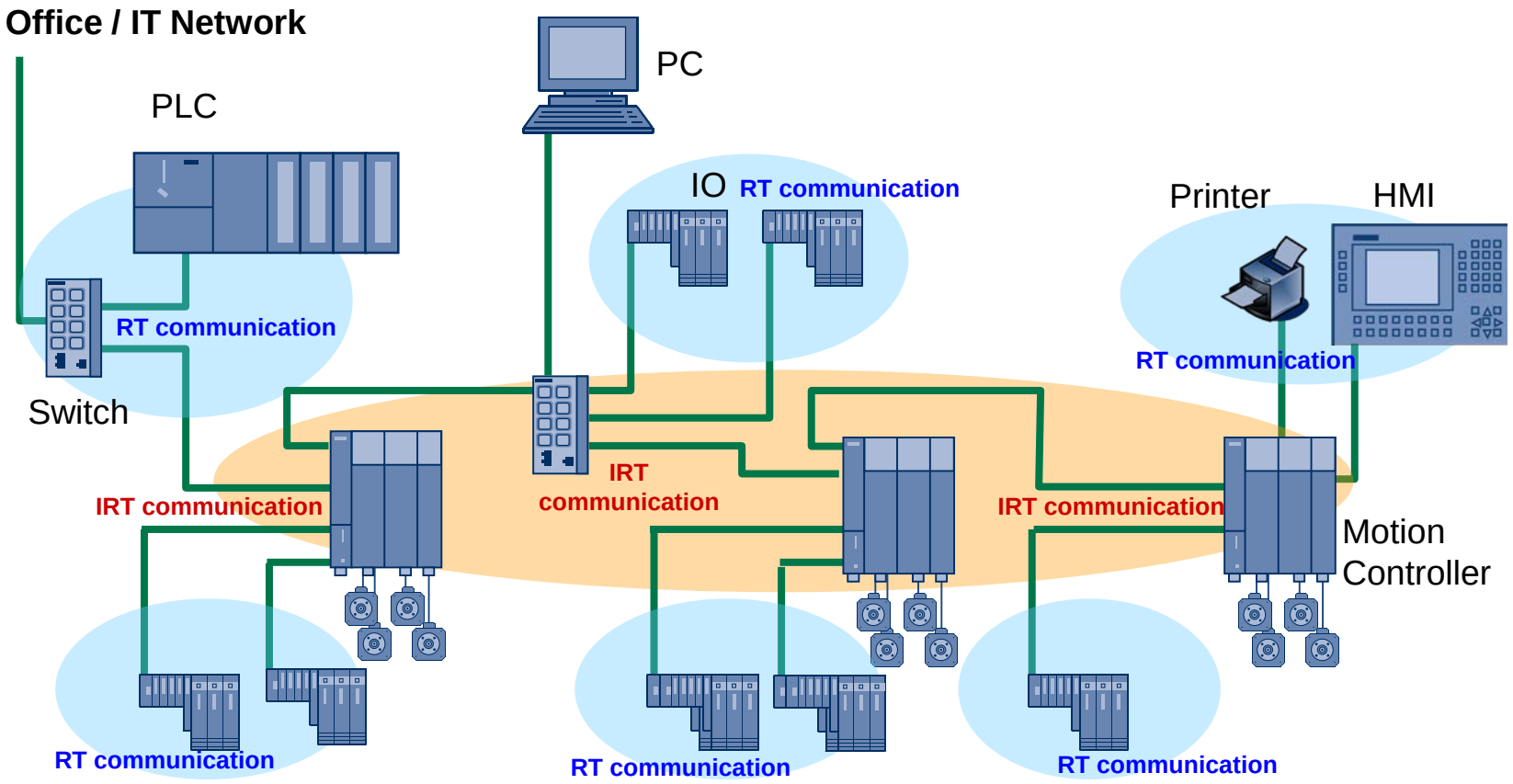

- Standard Ethernet devices can be connected at any point in the network
- No closed real-time domain

Competitive comparison: motion

Motion control comparison: Modbus TCP is left out of this table as they do not support motion control.

Technology	PROFINET	EtherNet/IP
Architecture	Open System (simultaneous TCP)	Open System (simultaneous TCP)
IEEE 802.3 compliant	Yes	Yes
Deterministic	Yes, Transparent clock < 1µs jitter calculated jitter	No, Boundary clocks Accumulating jitter
Synchronized Peer-to-Peer	Yes	Yes
TCP/IP traffic	Yes	Yes, with caution
Throughput	150 Axes/1ms 35 Axes/250µs	30 Axes/1ms
IEEE 1588	IEEE 1588v2 Built into PROFINET chips	IEEE 1588 Special switches needed
Automatic Timing Calculation	Yes	No

Depth of Features

- Speed, determinism
- Diagnostics
- Vertical
- PROFIenergy
- PROFIsafe
- I-Device
- Shared Device
- Wireless
- More
- Security (common problem and solution)

5 steps to determinism

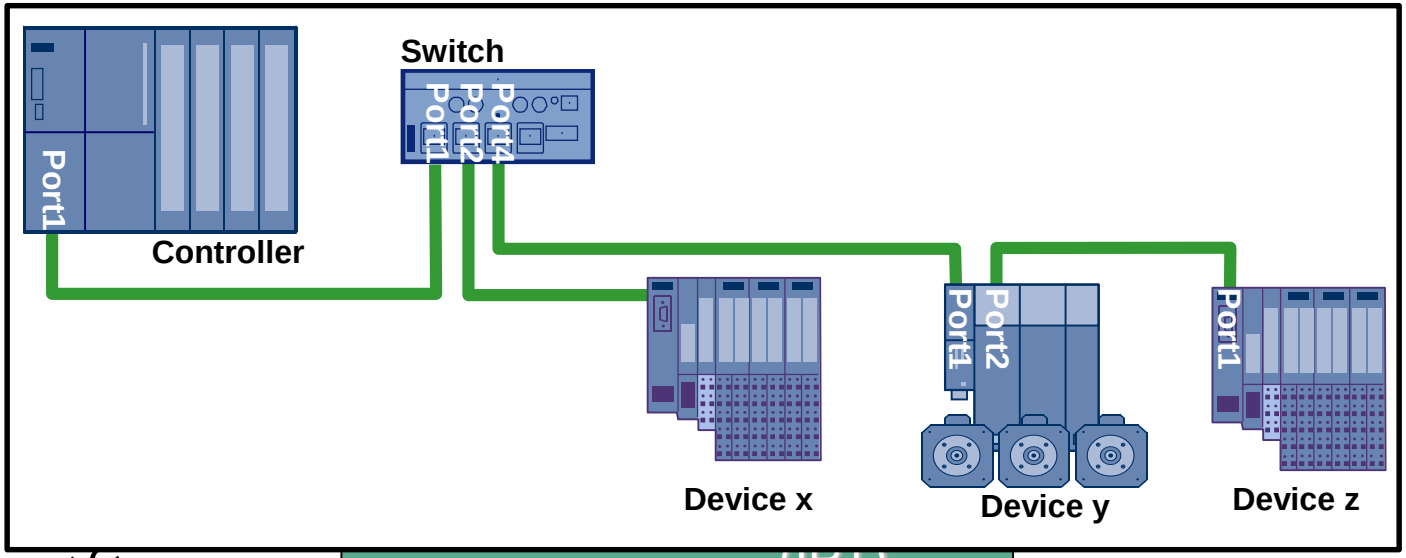

Deterministic

(IRT)

High Speed IO — Bandwidth Reservation (IRT)

Real-time — Layer 2 (RT)

Configuration — TCP/IP

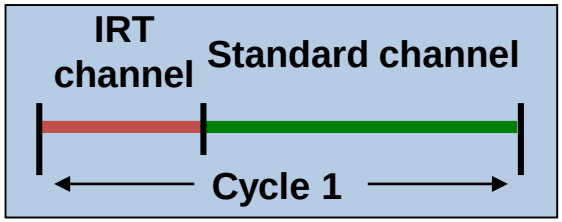

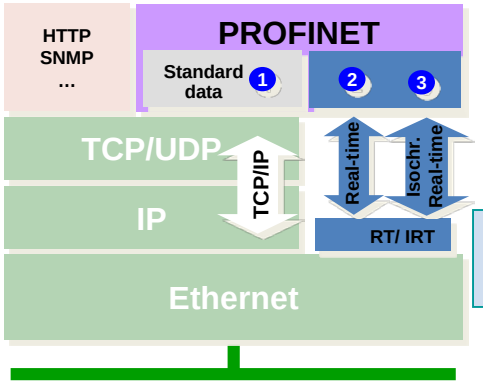

IRT = Isochronous Real-time
DFP = Dynamic Frame Packing

PROFINET and TCP/IP

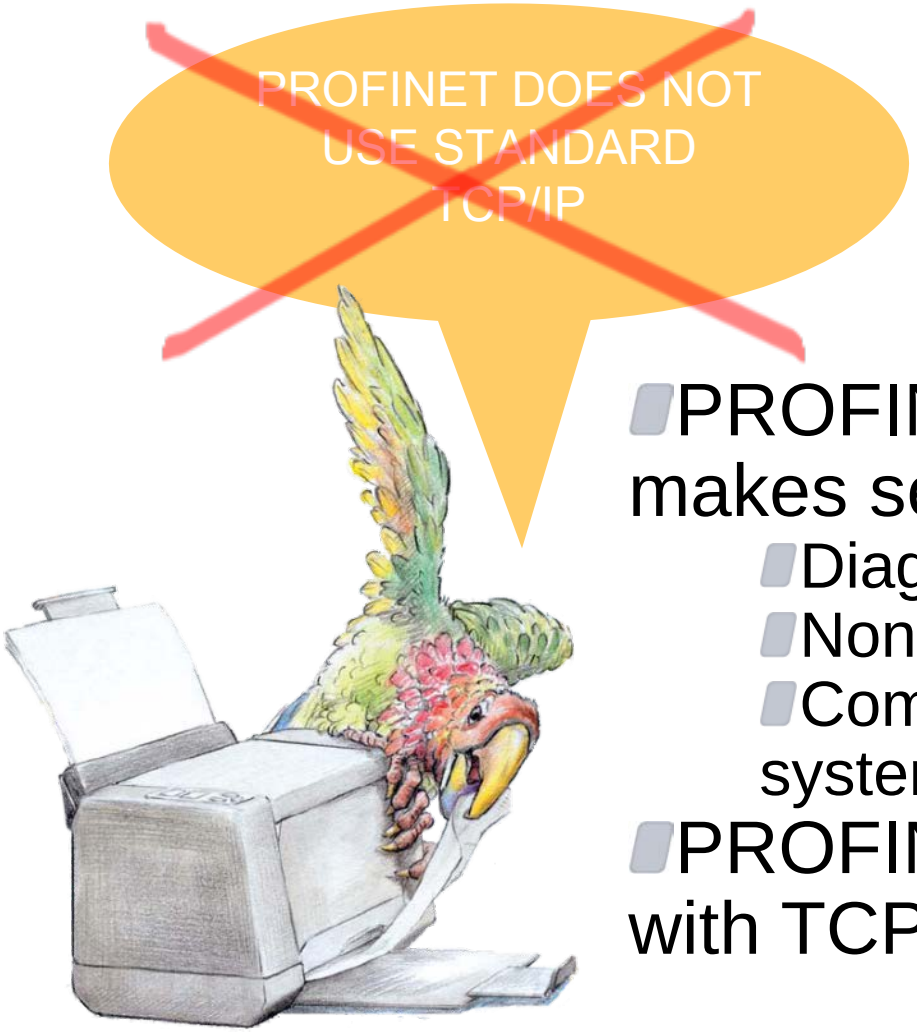

- PROFINET uses TCP/IP where it makes sense:
  - Diagnostics
  - Non time critical data
  - Communicating with higher level IT systems
- PROFINET real-time coexists with TCP/IP without restrictions

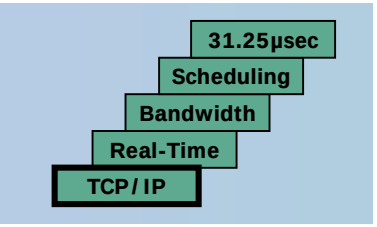

Why not use TCP/IP for real-time?

- Because it's not fast enough and it's not deterministic enough.
- Here's why:

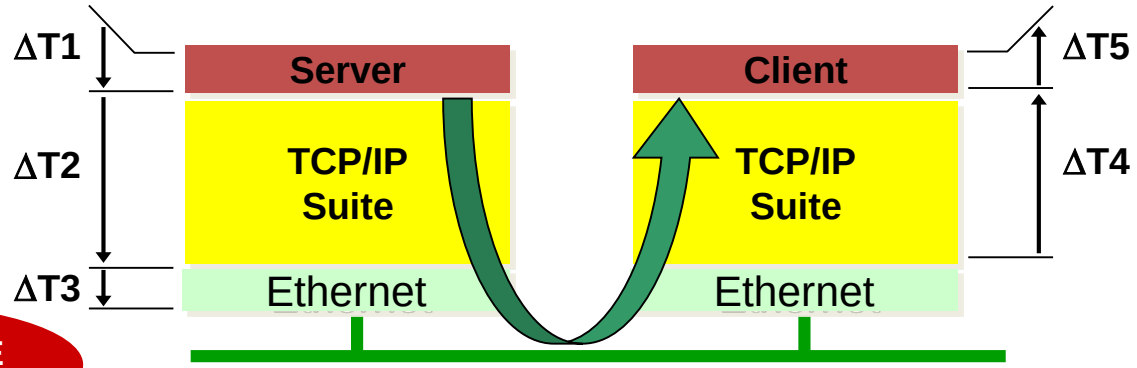

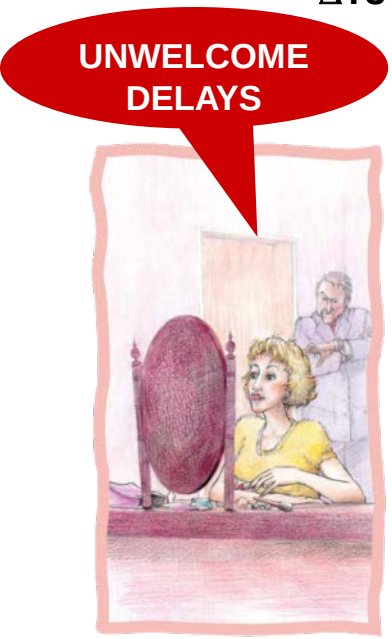

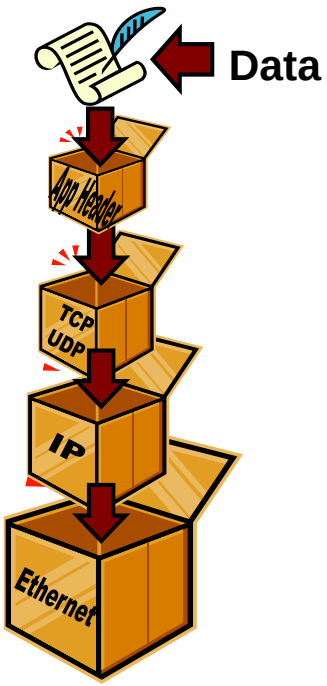

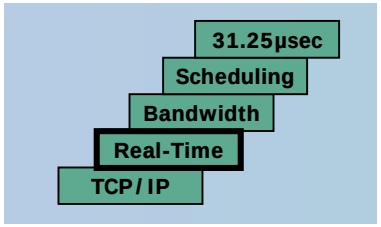

Ethernet doesn't cause delays

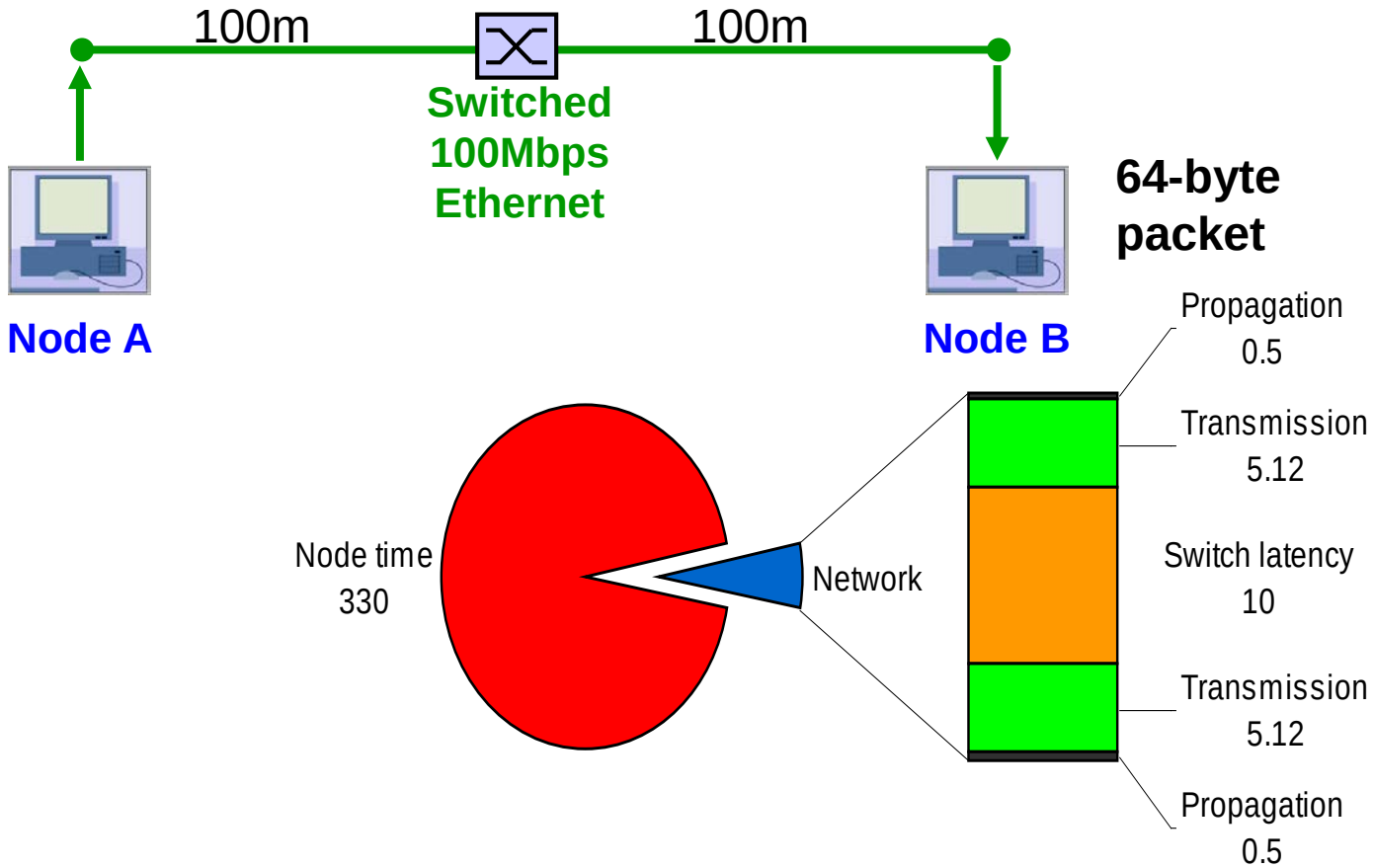

All times in µs

Source: University of Michigan, *Industrial Ethernet Book*, "Performance Metrics for Industrial Ethernet"

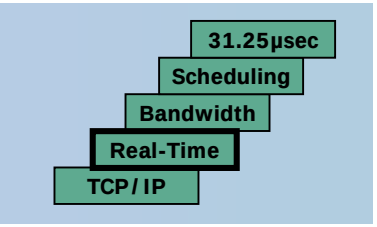

PROFINET RT (Real Time)

- The device determines which path the telegram takes

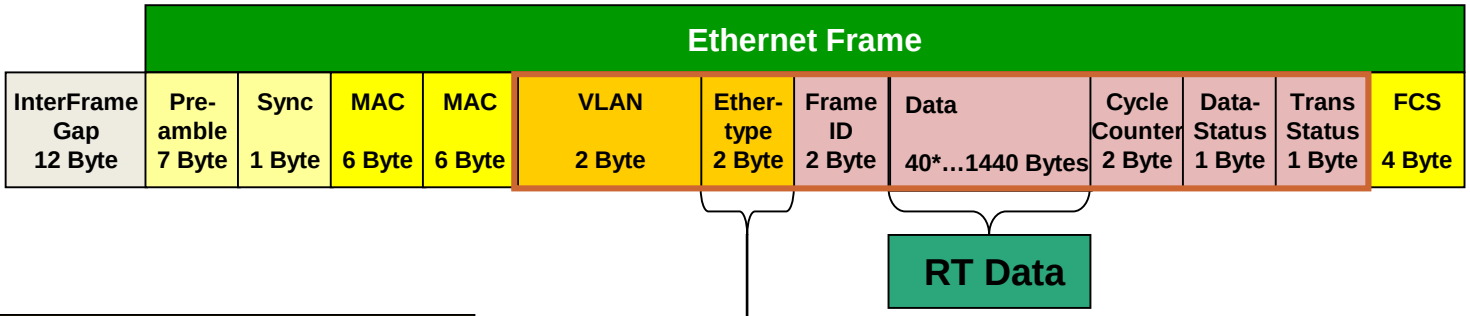

Ethertype (type of protocol):

Ethertype (**PN**):	**0x8892**
Ethertype (**IP**):	**0x0800**
EtherType (ARP):	0x0806
EtherType (IPV6):	0x86DD
…	

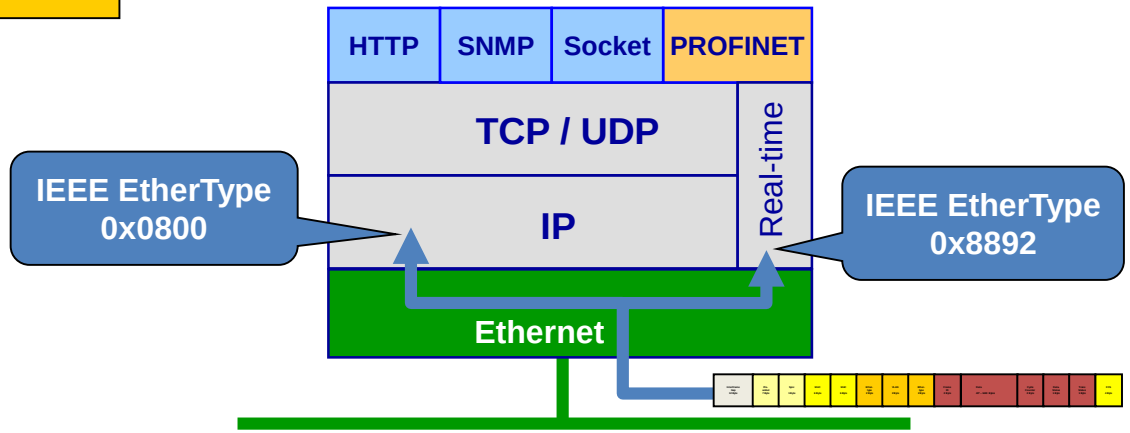

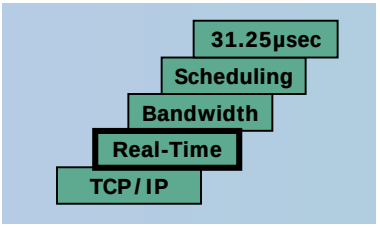

When you try to use all layers…

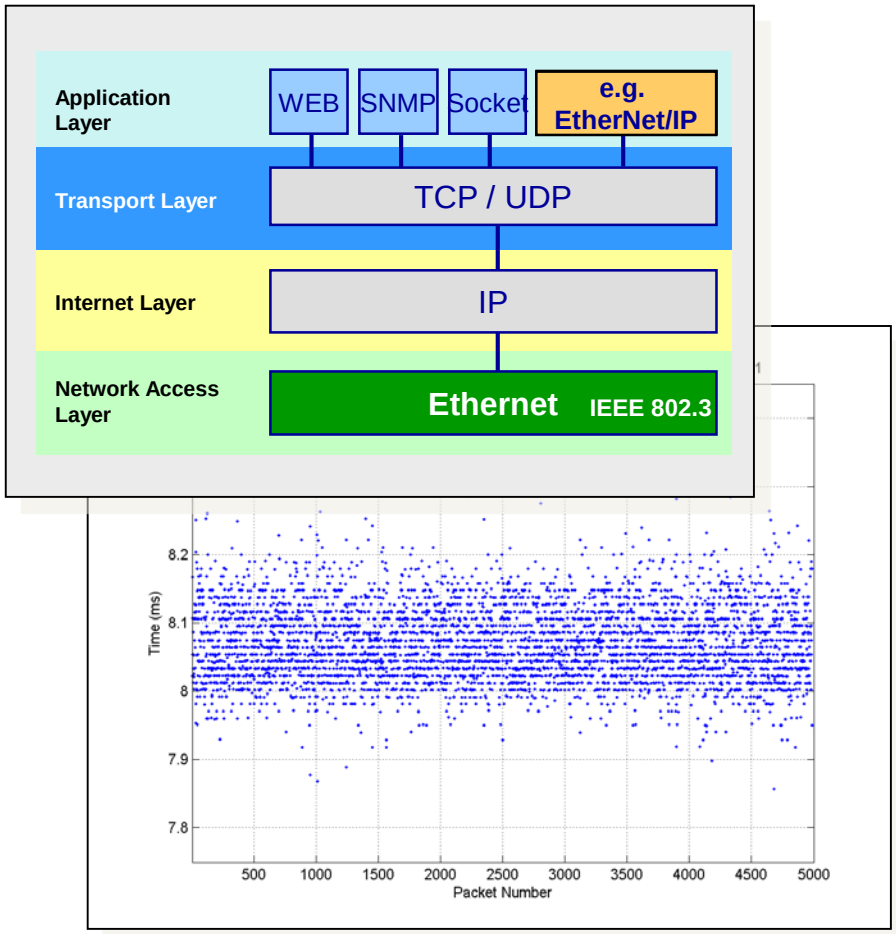

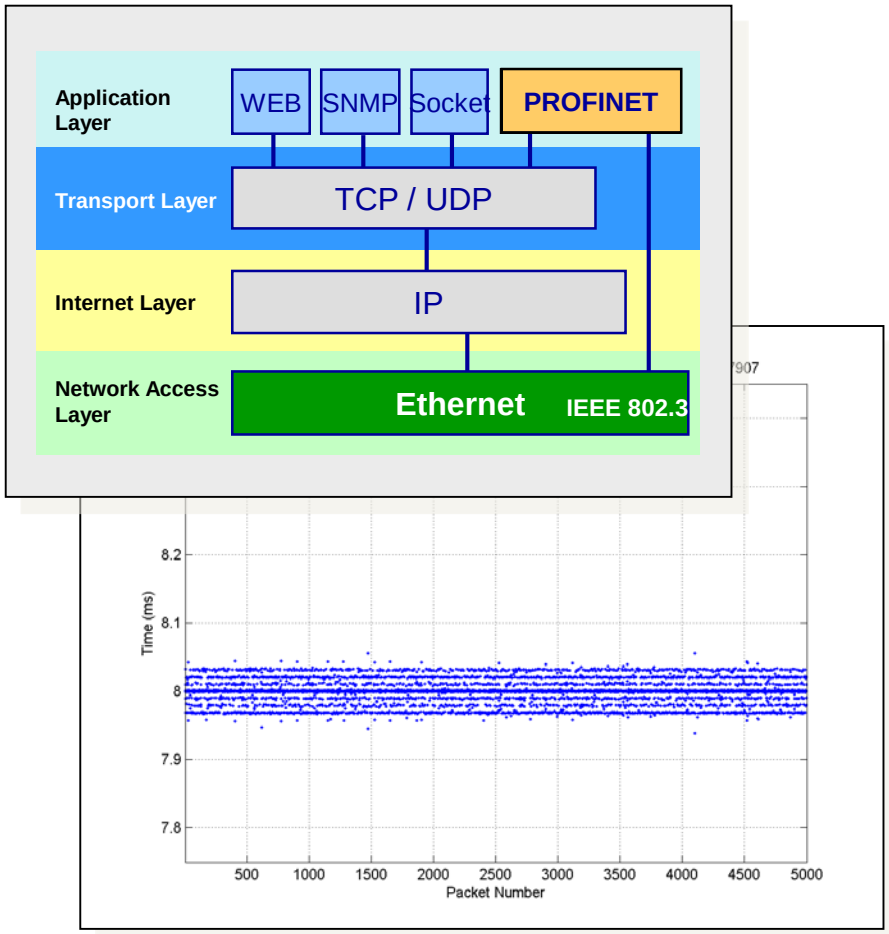

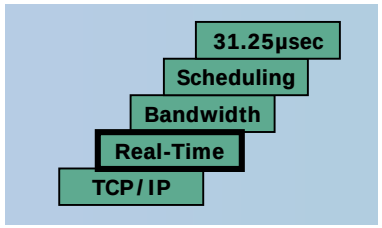

PROFINET is the enabling factor to achieve speed and determinism

When you try to use all layers…

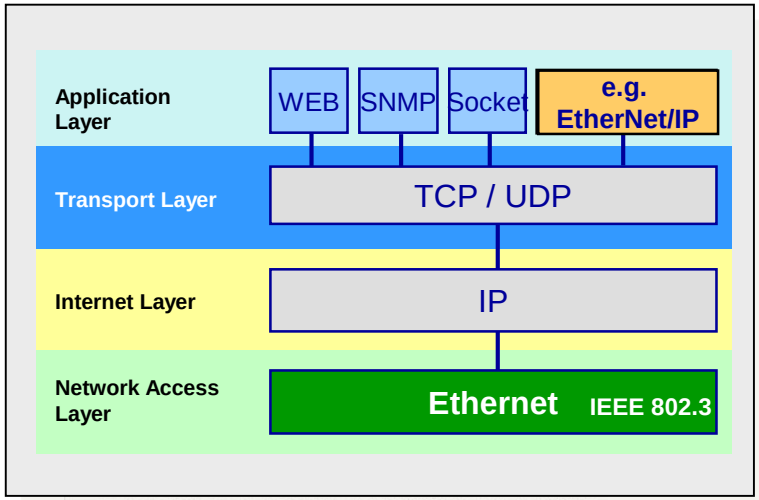

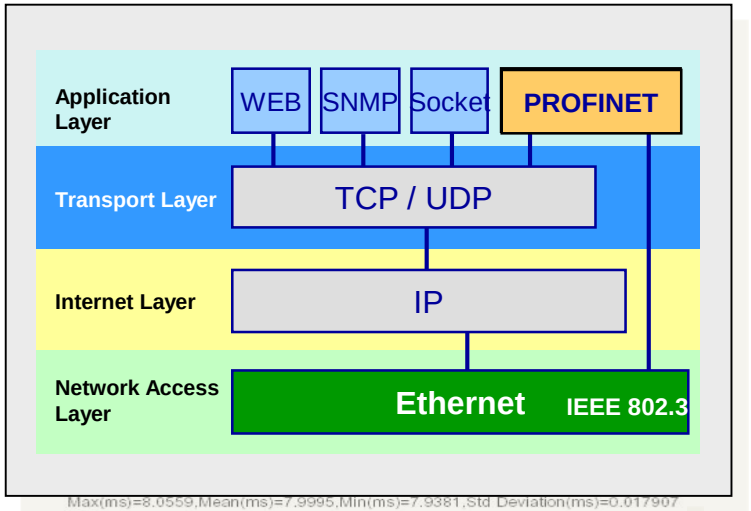

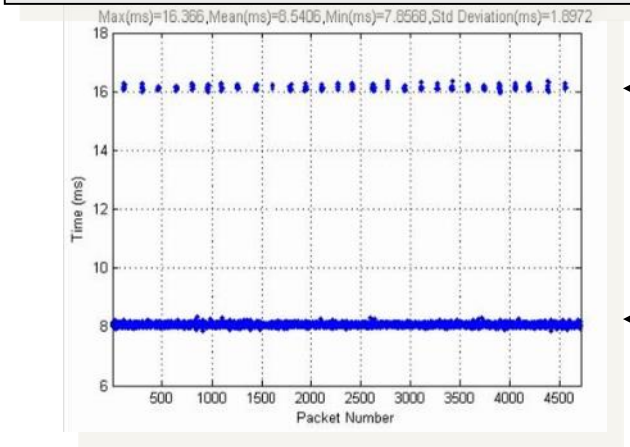

16 ms

8 ms

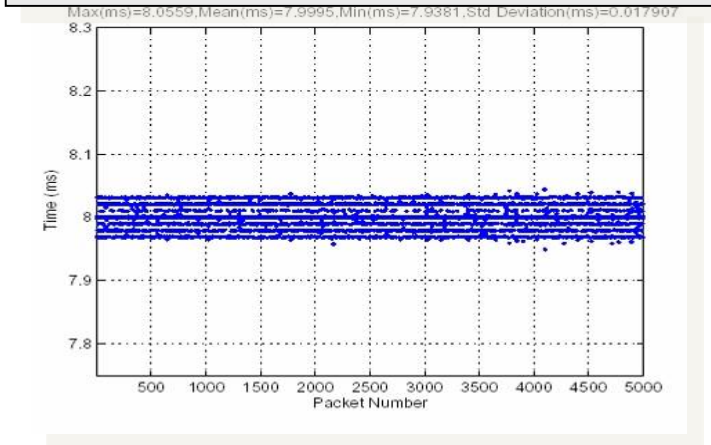

Less than 100µs Jitter

Source: University of Michigan, *Industrial Ethernet Book*, "Performance Metrics for Industrial Ethernet"

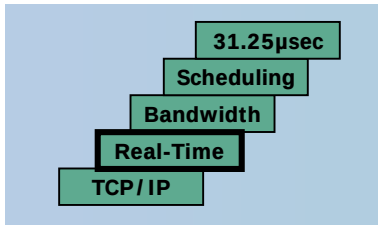

PROFINET is the enabling factor to achieve speed and determinism

Bandwidth Reservation for PROFINET IRT

IRT = Isochronous Real Time

- Communication system scheduling
  - Exact cycle synchronization
  - Separate time domains for Real-time and non-Real-time

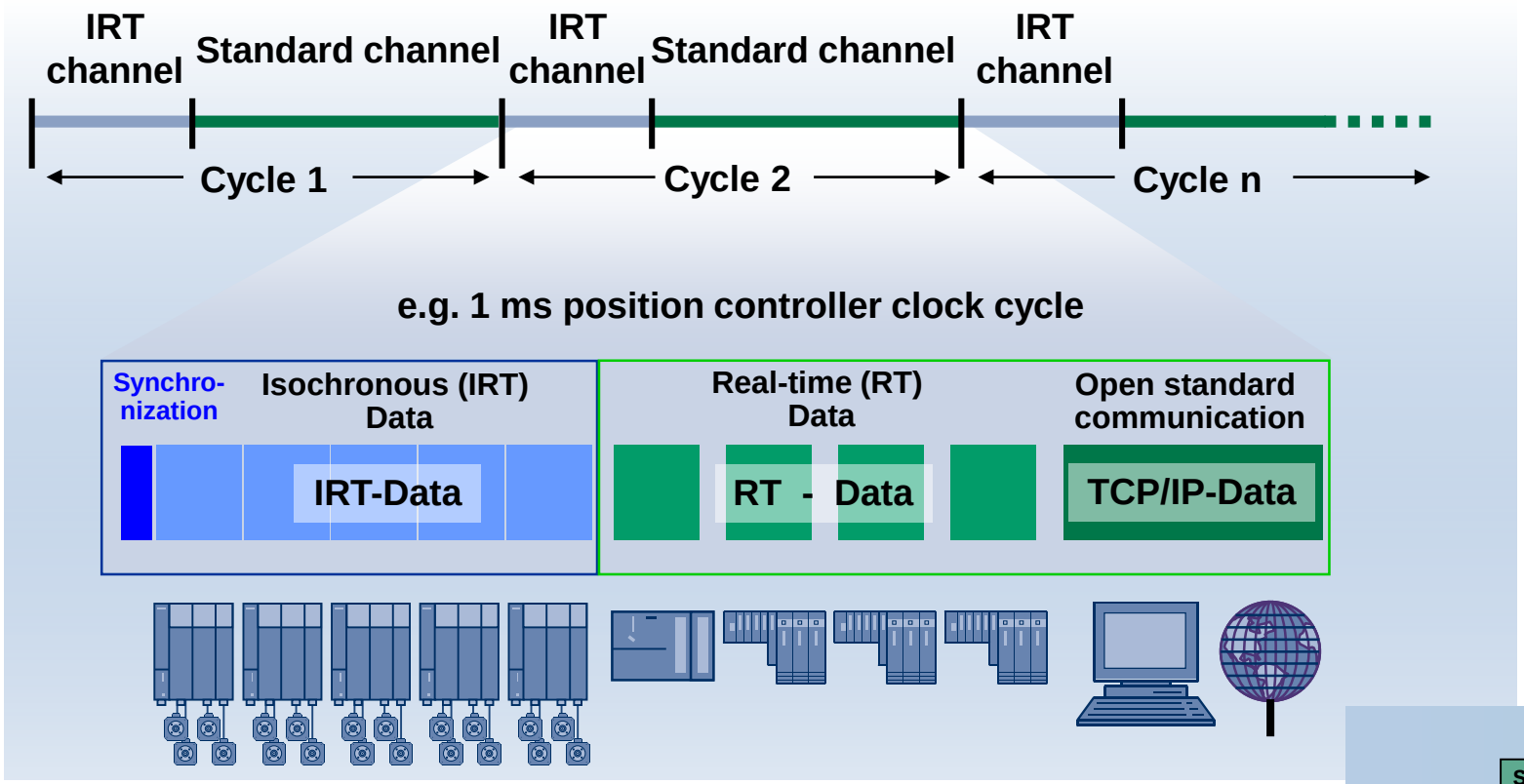

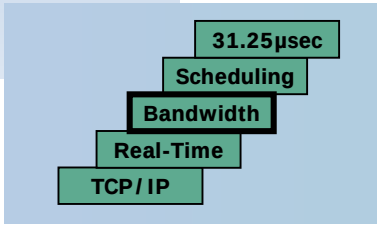

Scheduling for PROFINET IRT

- Every IRT device knows, when data arrives and where to send it

Switch schedule

Rec. port	Arrive	Frame	Departure	Dest. port
1	t1	1	t1+Δt	4
1	t2	2	t2+Δt	4
1	t3	3	t3+Δt	2
2	-	-	-	-
3*)	-	-	-	-
4*)	-	-	-	-

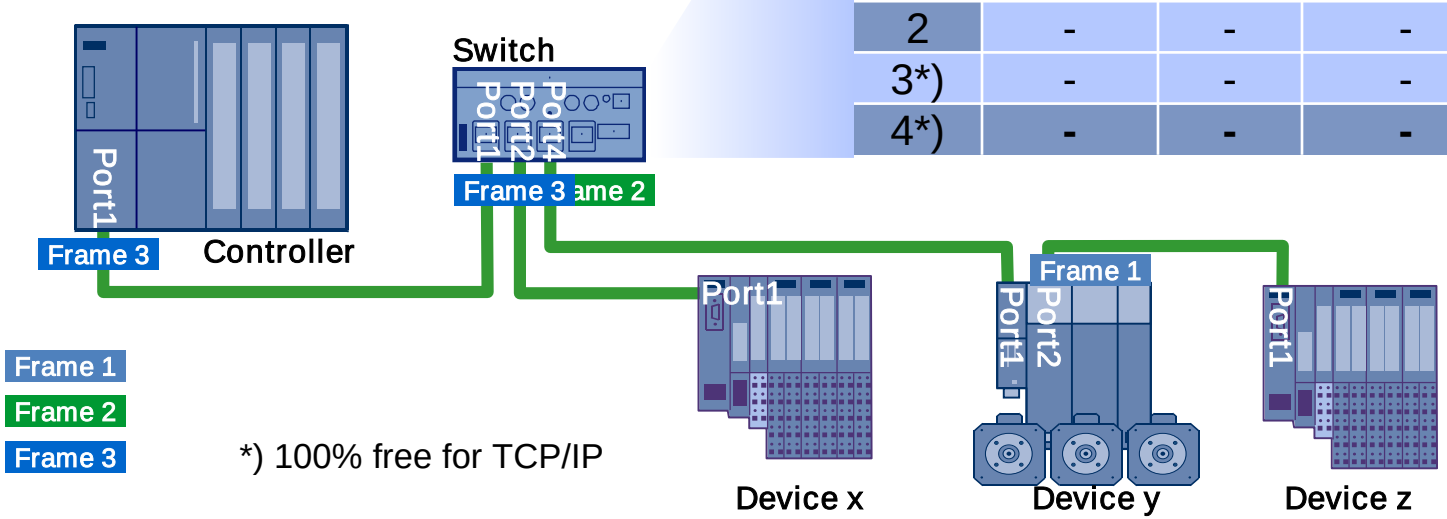

*) 100% free for TCP/IP

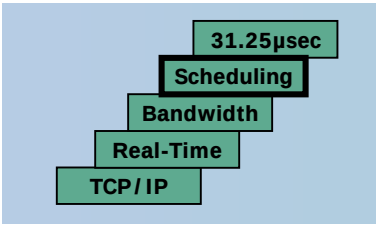

Switch must be IRT-aware

Functional principle of synchronization

IEEE1588

Boundary Clock

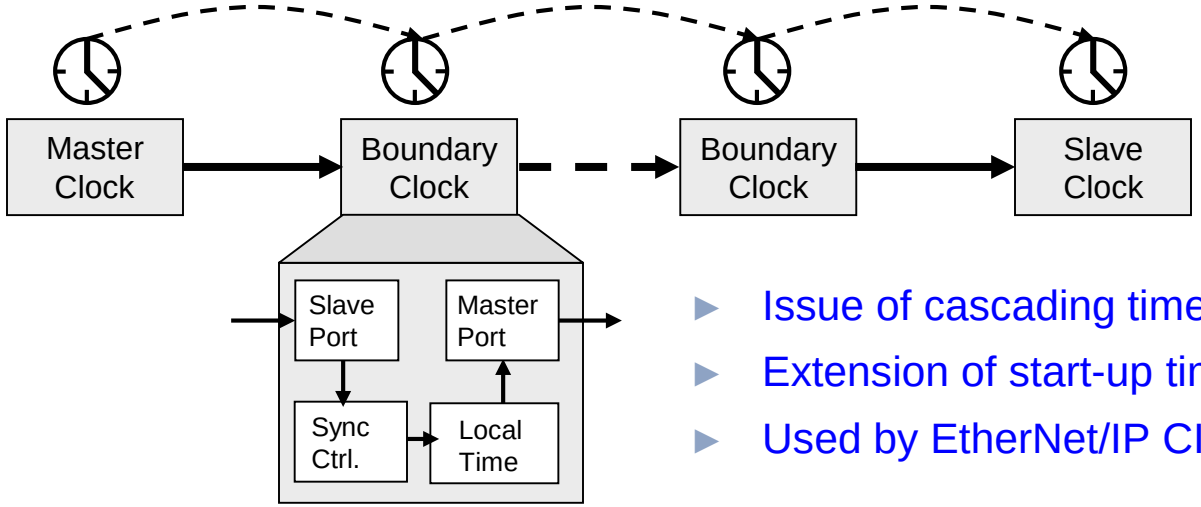

- Issue of cascading time control loops
- Extension of start-up time
- Used by EtherNet/IP CIPSync

PROFINET

Transparent Clock*

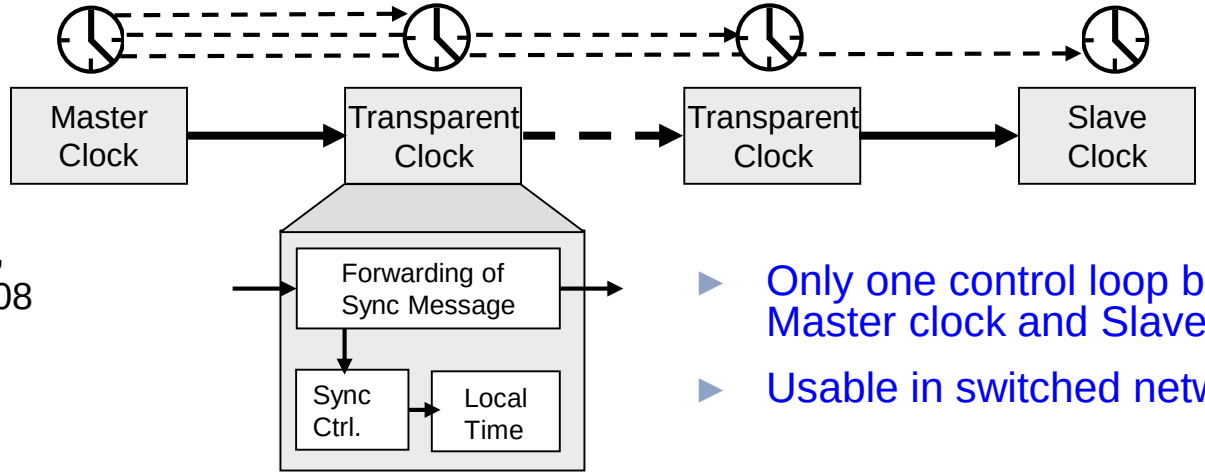

*part IEEE 1588 V2, approved March 2008

- Only one control loop between Master clock and Slave clock
- Usable in switched networks

31.25 microsecond cycle

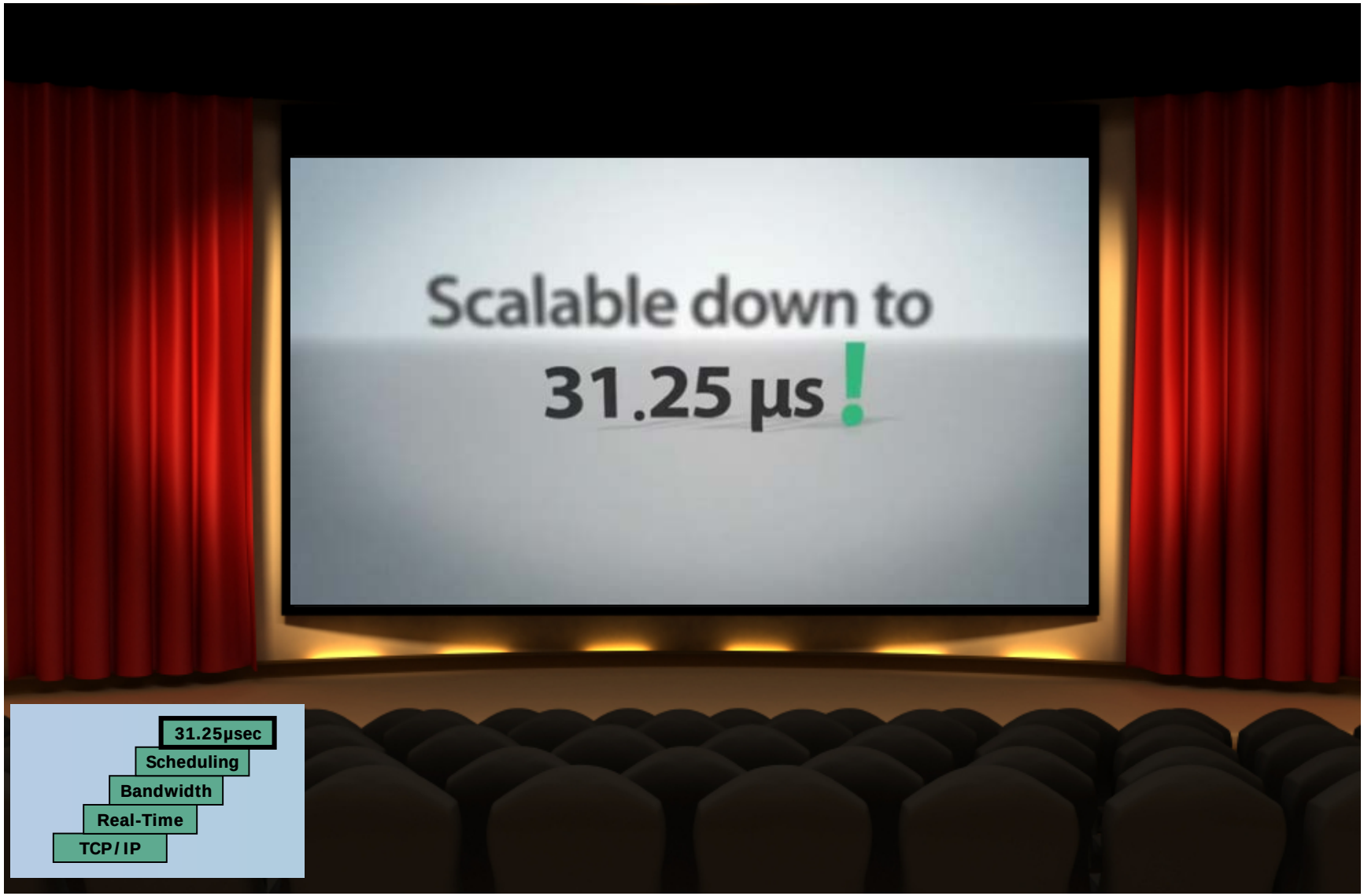

Summary

- PROFINET achieves industry requirements for speed and determinism using standard Ethernet by using these 5 steps
  1. Using TCP/IP where appropriate
  2. Skipping it when necessary
  3. Reserving bandwidth for higher performance
  4. Scheduling traffic to ensure motion control needs
  5. Fast Forwarding, Dynamic Frame Packing, and Fragmentation to achieve 31.25µsecond cycle times

Depth of Features

- Speed, determinism
- Diagnostics
- Vertical
- PROFIenergy
- PROFIsafe
- I-Device
- Shared Device
- Wireless
- More
- Security (common problem and solution)

The ISO/OSI Communications Model

Where Diagnostics fit in

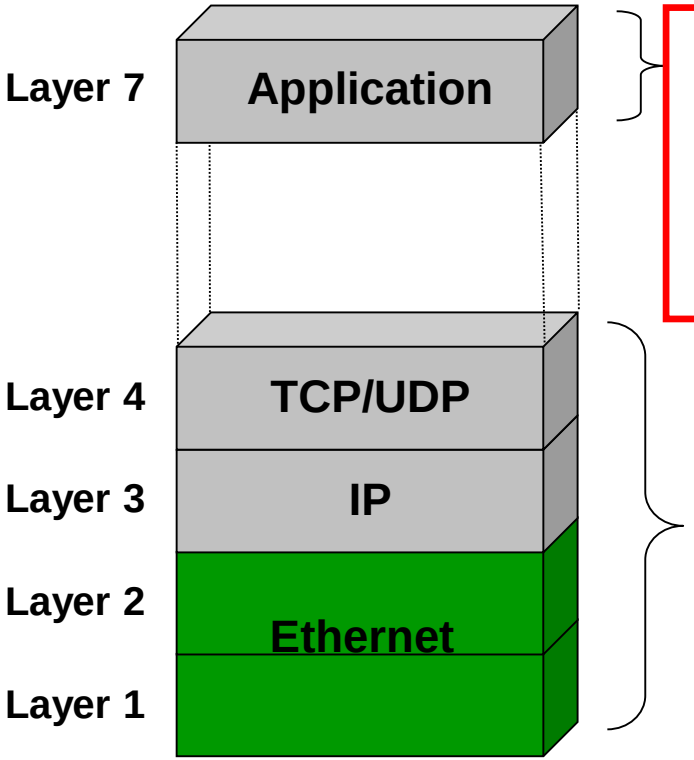

Application Layer Diagnostics (For Example: PROFINET)
Provides PROFINET device specific diagnostics (module unplugged, wire break, IO status, Data records, etc.)

Transport Oriented Layers Diagnostics (For Example: SNMP, HTTP, LLDP)
Provides information about TCP,UDP,IP,Ethernet (link down, bandwidth, statistics, connections, etc.)

Ethernet based systems can provide diagnostics on the Transport oriented layers (lower level) as well as Application based diagnostics (higher level).
Picking the right protocol is important if you want a complete set of diagnostic capabilities.

Device Diagnostic Information

- Logical model provides quick error localization
- Diagnostic information is structured hierarchically

>>>>> Station name >>>> Slot >>> Channel >> Channel type > Error information

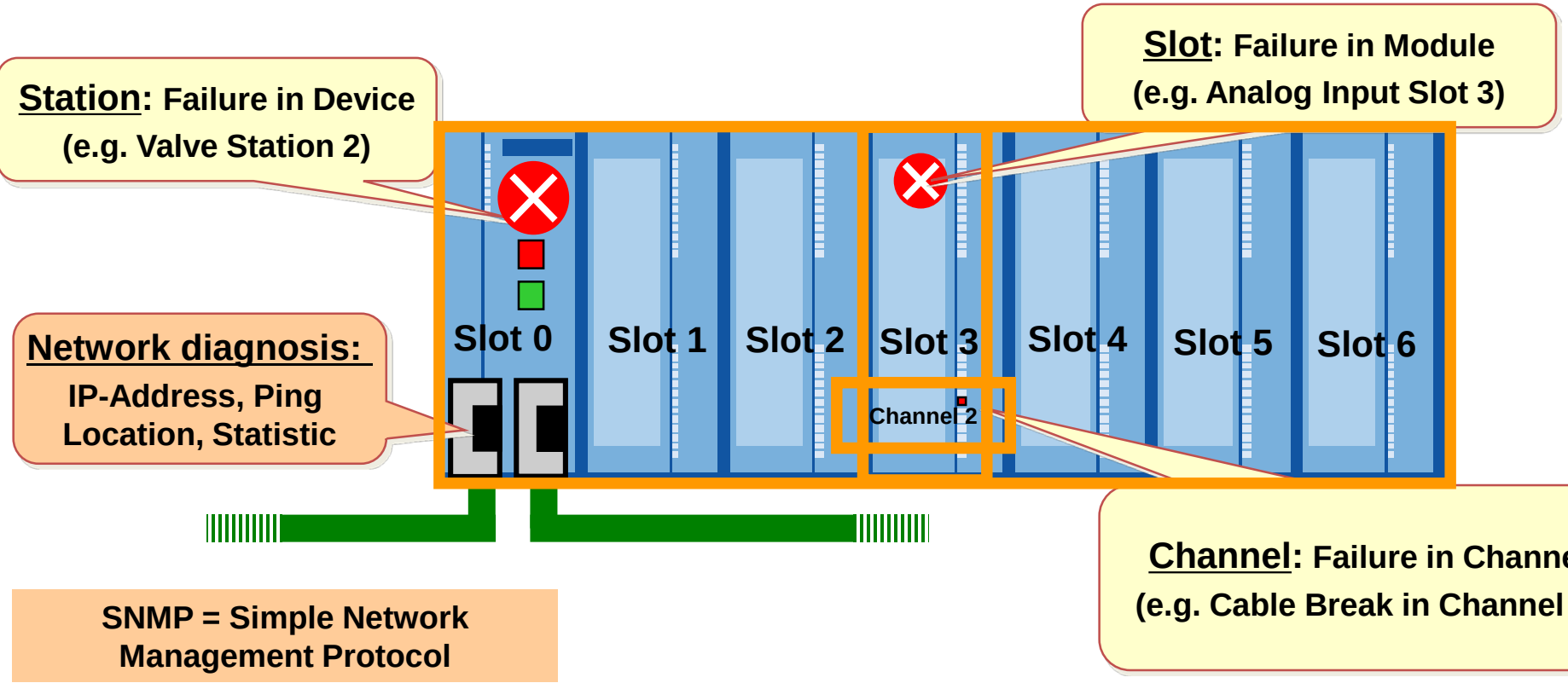

Diagnostic Information

- Examples of Diagnostic Information
  - The device monitors the Output Channels in order to discover a wire break (no current is flowing although the output is set to ‘1’)

  - An analog Input has a range of 0..10V An input voltage of 12V is detected and reported as overvoltage.

→ Diagnostic Information is not only “PROFINET related”, but also helps in the application.

Access to Diagnostics

1. Diagnostics in the PLC
   - IO Device sends diagnostic to the IO Controller
   - Reaction to the failure directly in the PLC
2. Diagnostics to PC and HMI
   - IO Supervisor reads diagnostics directly from IO Devices
   - Visualization of failures on HMI / PC system
   - Diagnostics information stored and archived for analysis

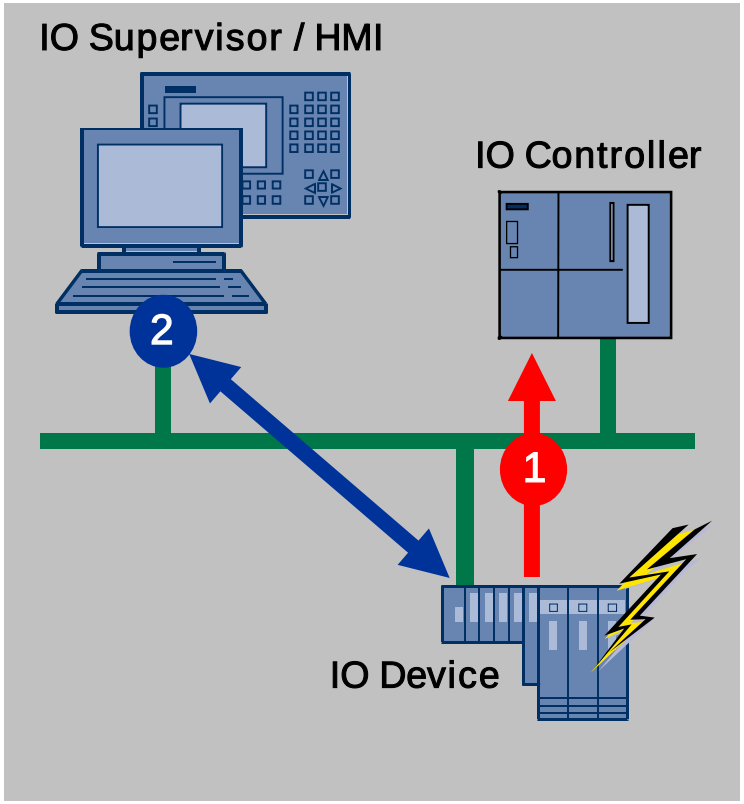

Diagnostic information is there where it is needed

Diagnostics and Switches

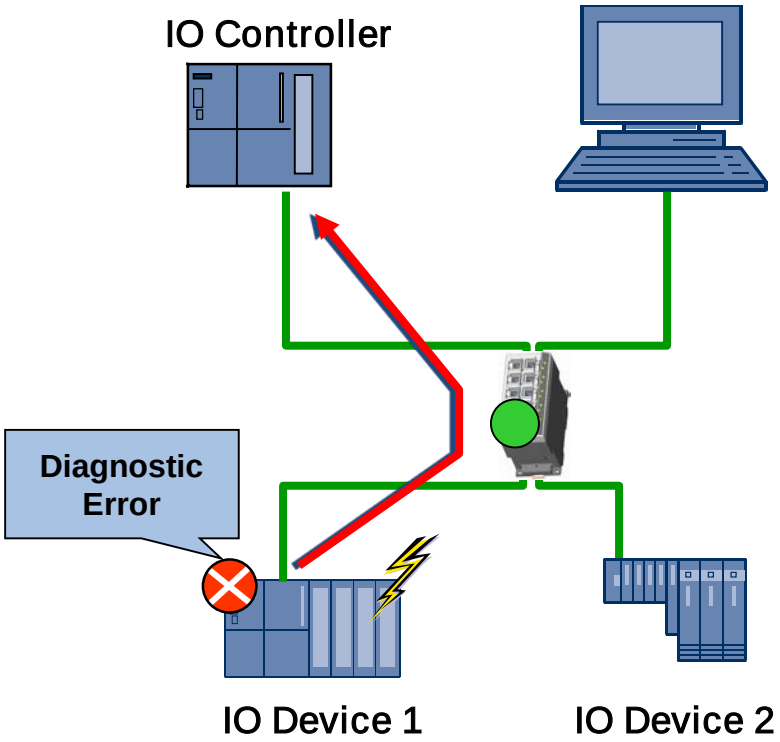

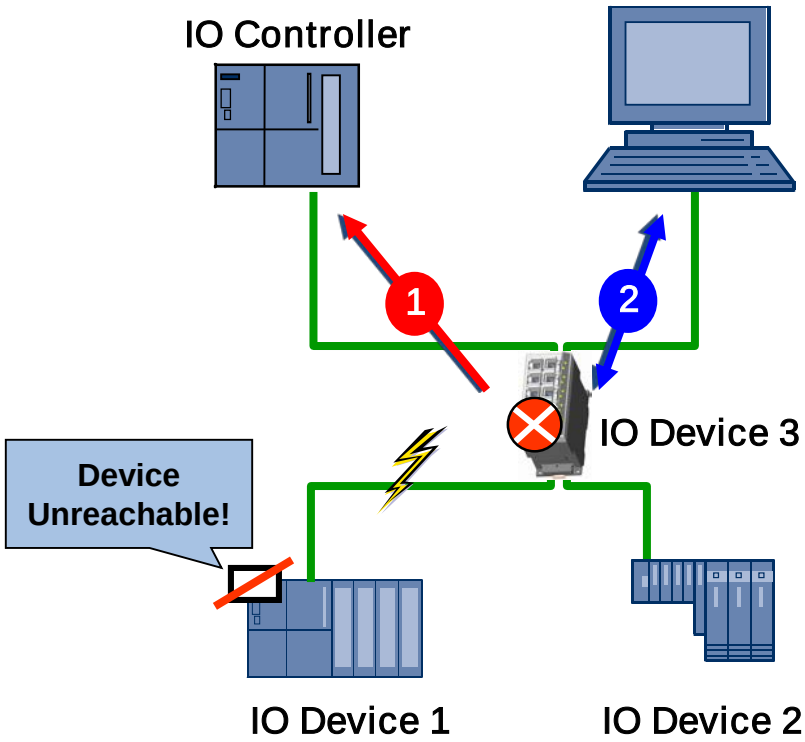

- Network is operating normally
- The switch passes the PROFINET Diagnostic from the IO Device to the IO Controller
- The switch could be optionally configured as a PROFINET IO device

- Network Failure!
- Switch is configured as a PROFINET IO Device (GSD)
- Switch reports Network failure as PROFINET Diagnostic to the IO Controller (1)
- Additional SNMP channel for Standard Information (2) – more later

ISO/OSI Model: Where Diagnostics fit in

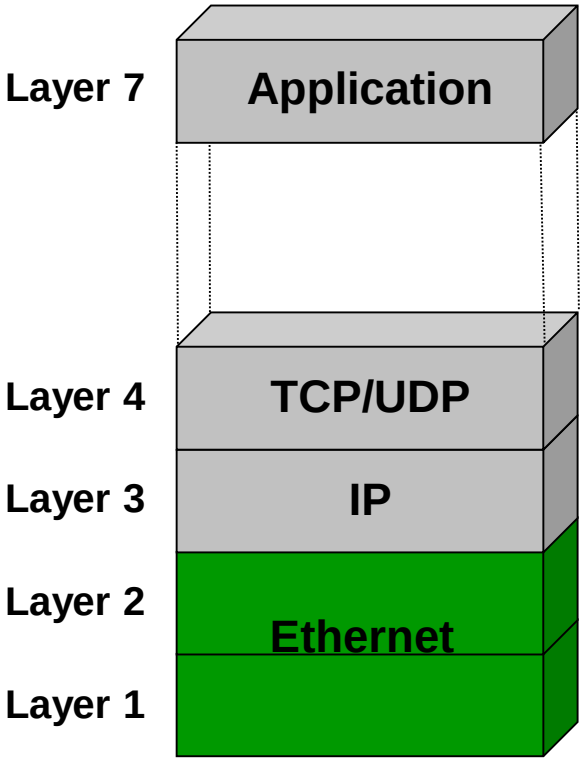

Application Layer Diagnostics (For Example: PROFINET)
Provides PROFINET device specific diagnostics (module unplugged, wire break, etc.)

Transport Oriented Layers Diagnostics (For Example: **SNMP, HTTP, LLDP**)
Provides information about TCP,UDP,IP,Ethernet (link down, bandwidth, statistics, connections, etc.)

Ethernet based systems can provide diagnostics on the Transport oriented layers (lower level) as well as Application based diagnostics (higher level).
Picking the right protocol is important if you want a complete set of diagnostic capabilities.

IT Standards f/PROFINET Network Diagnostics

How does it work…

Benefit	Protocol	Description
Standard tools for reading statistics and diagnostics	SNMP	Simple Network Management Protocol for network diagnostics
Web access to devices for configuration / diagnostics	HTTP	Hyper Text Transfer Protocol for Web services and browsing

Network Diagnostics Using **SNMP**

- PROFINET uses SNMP
  - PROFINET uses standard MIBs (Management Information Base MIB-II, LLDP Discovery MIB)
  - This MIB-II contains information about device name, IP address, location, status and statistics (examples include CRC errors, port status, bandwidth utilization,…

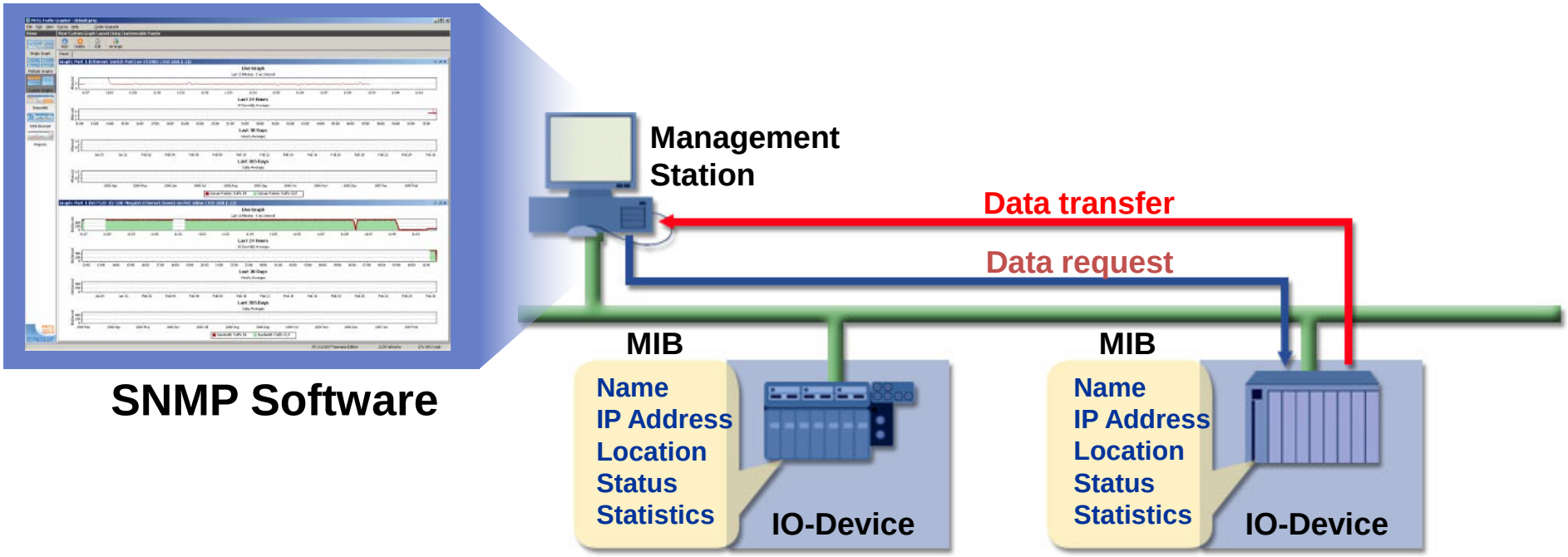

Network diagnostics using **HTTP**

Easy access over the web (local or remote)

IO Controllers, IO Devices, proxies or switches can have web diagnostics implemented

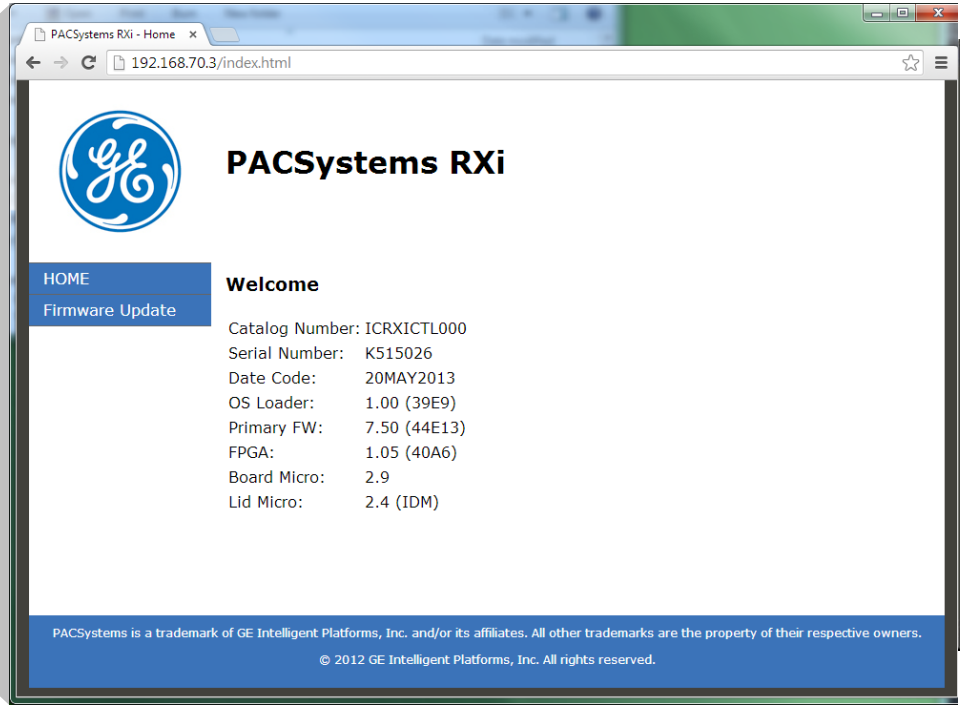

Simple access
Regardless of location, even wireless
No engineering tool needed

IT Standards f/PROFINET Network Diagnostics

How does it work…

Benefit	Protocol	Description
Mapping the network topology and simple device replacement	LLDP	Link Layer Discovery Protocol, IEEE 802.1AB

LLDP (Link Layer Discovery Protocol)

- The Link Layer Discovery Protocol (LLDP) is a vendor-independent protocol and independent of the network structure.
- Via LLDP, connected devices specify their identity and properties to their neighbors cyclically every few seconds.
  - ports, names, transmission rates, etc.
- The information is stored in a local table (LLDP Discovery MIB)
- Benefits of using LLDP include…
  - …topology Information can later be read out with SNMP from the LLDP Discovery MIB
  - ...simple device replacement can be achieved

Example LLDP Table:

Discovery MIB - Switch	
Port 1	**- Empty -**
Port 2	**I/O 2 – Port 2 – IO Device**
Port 3	**I/O 3 – Port 1 – IO Device**
Port 4	**PLC – Port 1 – IO Controller**
Port 5	**I/O 1 – Port 2 – IO Device**
…	**…**

Topology Diagnostics / View

- Use of standard Ethernet mechanisms
  - LLDP
  - SNMP
- Topology diagnostics for devices
  - Same modeling of Ports as I/O channels
- Standard and topology view (offline / online)
- Maintenance information

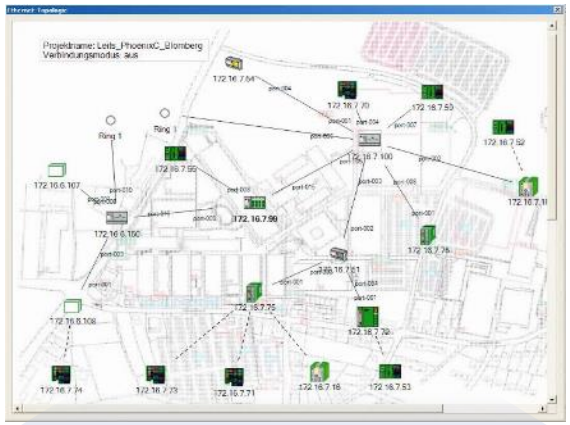

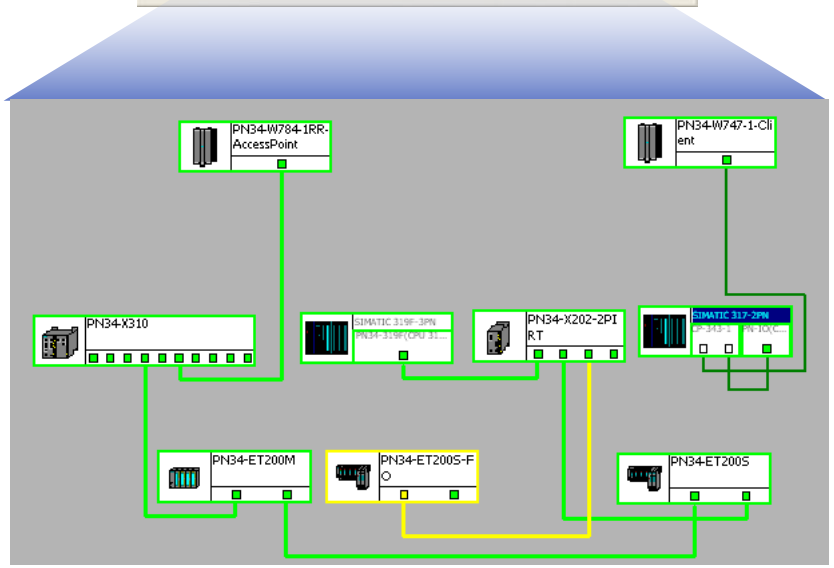

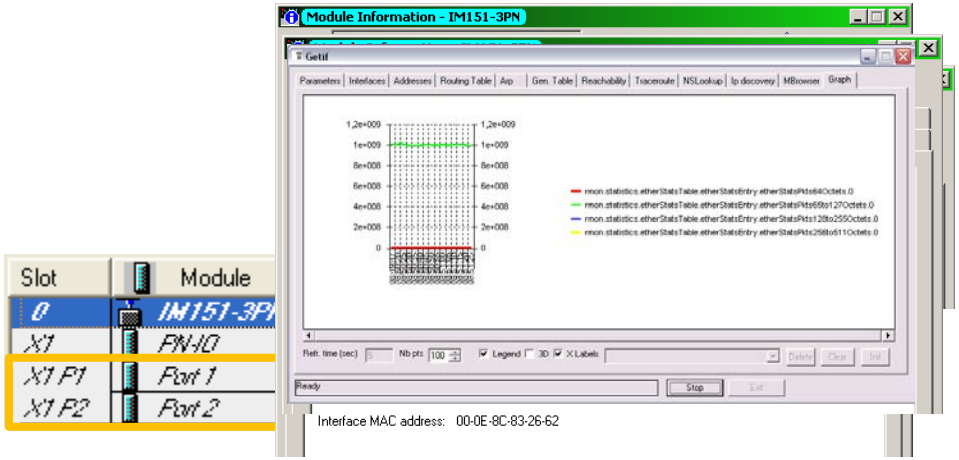

Simple Device Replacement

- How to replace a PROFINET device which has failed without a engineering tool?
  - Devices with memory card
    - Transfer memory card to keep existing device name
  - Devices without memory card
    - Using the PROFINET simple device replacement feature
      - Our Phoenix Contact Device failed and does not have a memory card. We need to replace it with a new device with “empty” device settings.

Simple Device Replacement

Simple Device Replacement

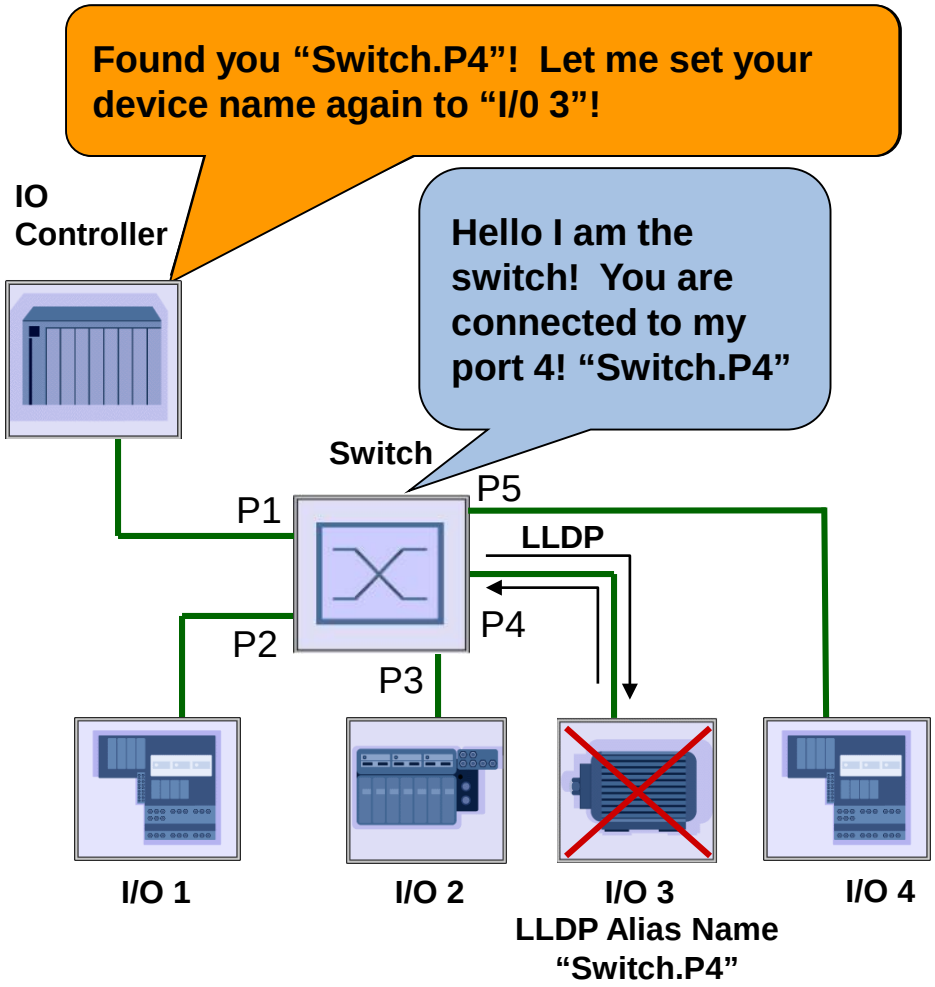

1. Device "I/O 3" fails
2. Device is replaced with new MAC address and empty name
3. Devices exchange LLDP
4. The neighbor sends a <u>LLDP alias name</u> to new device
5. Controller finds new device using DCP and LLDP alias name
6. Device addressed with DCP "Set name" from controller
7. IO Controller starts device and system is back online

Simple Device Replacement

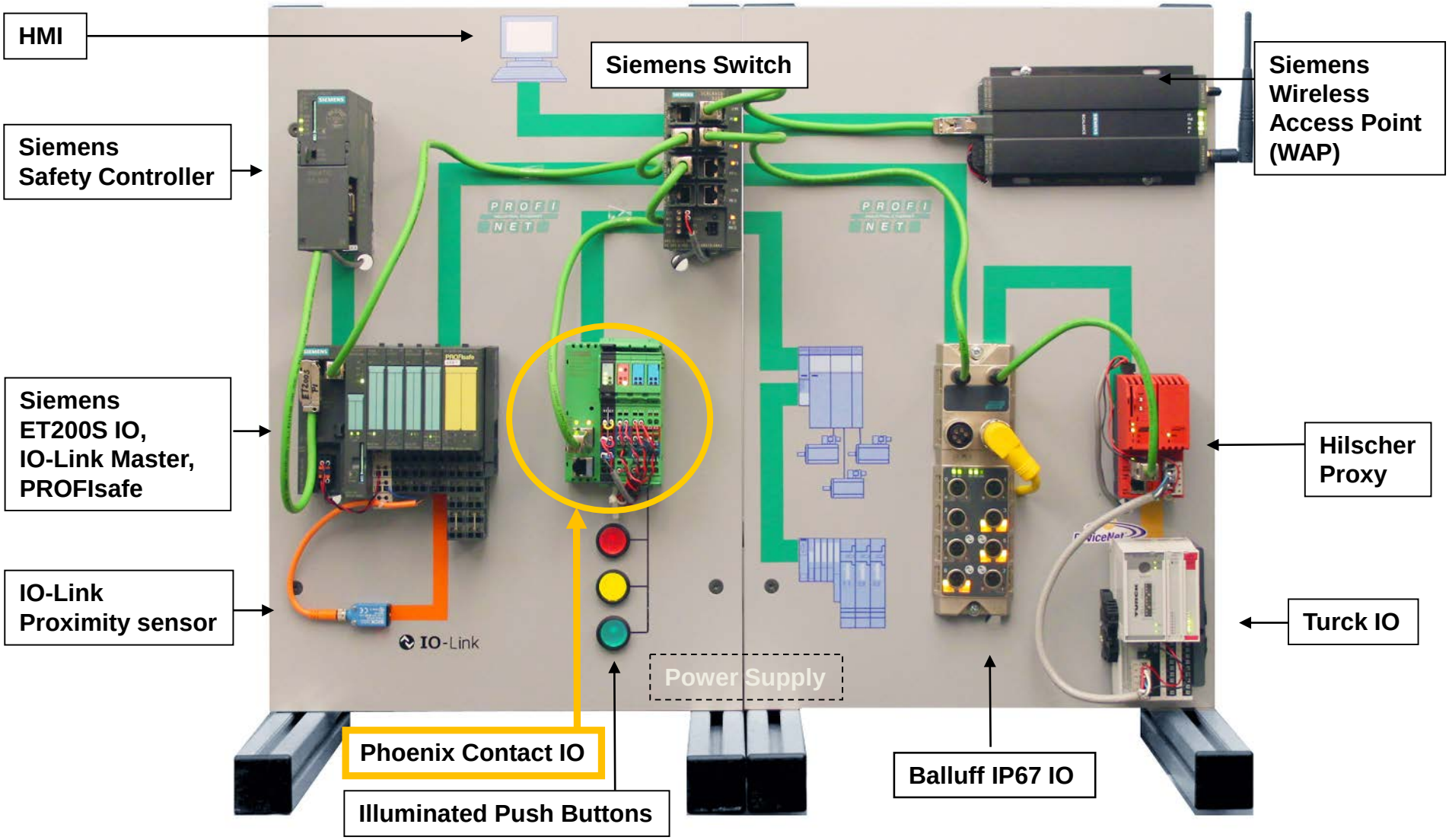

PROFINET Simple Device Replacement

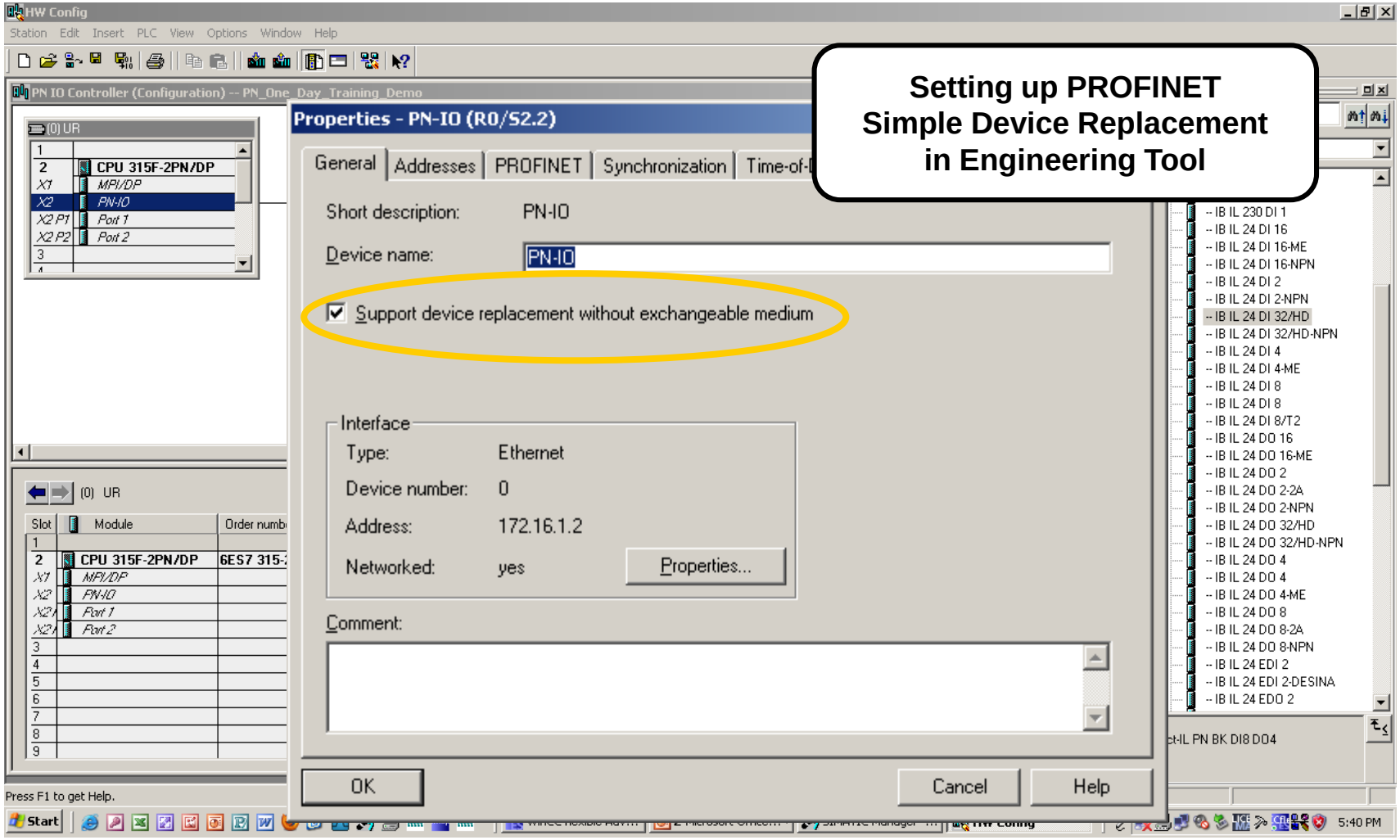

Setting up PROFINET Simple Device Replacement in Engineering Tool

Use of Ethernet diagnostic tools

Network analysis with standard tools

- Debugging during development w/
  - Ethernet Sniffer
    - Wireshark – www.wireshark.org
    - PROFINET decoding is built in
    - Color filter available

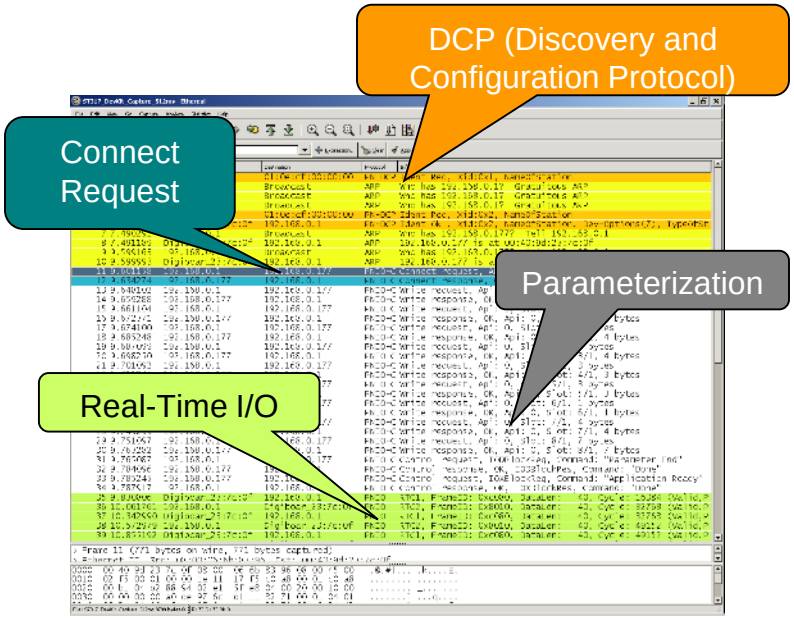

Device Link and traffic detection with LEDs

- LED Display
- Simple connection test without configuration

Competitive comparison: diagnostics

Technology	PROFINET	EtherNet/IP	Modbus TCP
Network Management	(DCP, DHCP option, SNMP, LLDP, topology, options, naming concept, comprehensive diagnostics)	(DHCP, bootP, DHCP option 82, SNMP loop holes, vendor specific, limited network diagnostics, special switches very likely)	(limited to IT tools, SNMP loop holes, vendor specific, no built in network functions)
Comprehensive Diagnostics	Yes, Application and Network	No	No
Diagnostics IO Status	Yes	No, IO only	No
Diagnostics Network Browser (can find IP or naming issues)	Yes, returns all PROFINET Devices and information	Limited to IT or vendor tools no common tool	Limited to IT or vendor tools no common tool
Diagnostics Topology	Yes	No	No
SNMP loop holes	No	Yes	Yes

Resources

- PROFINET Diagnostics Video
- PROFINET Diagnostics for PROFINET Webinar

Depth of Features

- Speed, determinism
- Diagnostics
- Vertical
- PROFIenergy
- PROFIsafe
- I-Device
- Shared Device
- Wireless
- More
- Security (common problem and solution)

How do I move information vertically

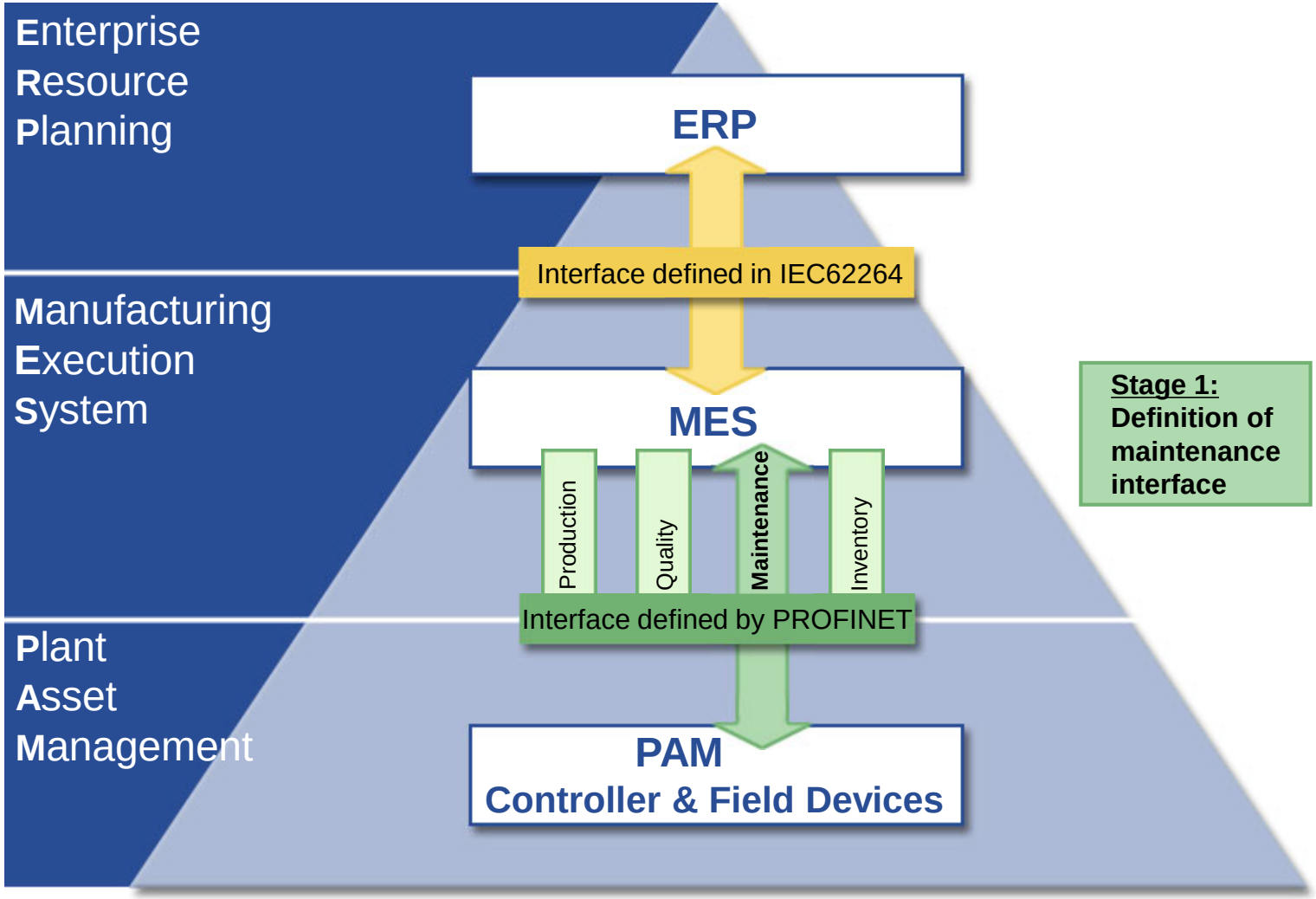

White paper: MES and PROFINET

Depth of Features

- Speed, determinism
- Diagnostics
- Vertical
- PROFIenergy
- PROFIsafe
- I-Device
- Shared Device
- Wireless
- More
- Security (common problem and solution)

Application Profiles

- Agreement within a device family on how to use the PROFIBUS / PROFINET data by adding data structures, cyclic / acyclic services, behavior, parameterization, diagnosis, integration, etc.

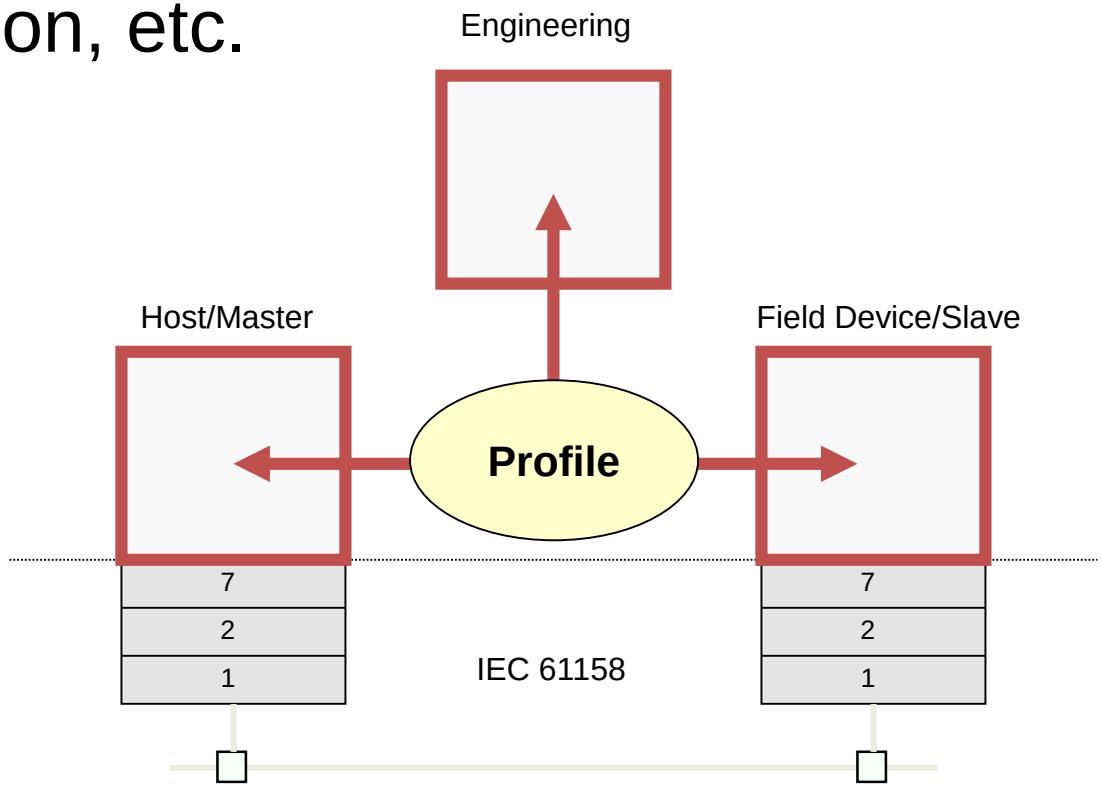

Application Profiles

"Best Practice Patterns"

Profile Guidelines

- **IEC 62390**
- **Data types**
- **Diagnosis**
- Models

Application Profiles

- Cooperation with other organizations e.g. OPC, DriveCom, VDMA, OpenPLC, etc.
- Training (UML, Safety, Models, etc.)
- Tools

"Common Profiles"

- I&M Functions
- Redundancy
- Time Stamp
- PROFIsafe

PA Devices	Water/ waste water	intellig. Pumps	SEMI	Remote I/O for PA	Laboratory Devices	Robot /NC	Encoder	PROFI drive	Fluid Power
		●		●		?	●	●	?

FF, IEC 61804

SEMI

Interbus, CAN, etc.

Ident (Bar-code, RFID)	Weighing & Dosage	Low Voltage Switch-gear	IO-Link	Trains	PROFI energy
●	?	●	●	●	●

■■■■■■

● **PROFINET IO**

PROFIenergy Use Cases

- Switch off during short breaks
- Switch off during long breaks
- Switch off during unplanned breaks
- Reading of measured data
  - Provides a means of reducing or shutting off power when demand will be exceeded

Competitive comparison

Energy Management	PROFINET	EtherNet/IP	Modbus TCP
Production Pause savings	Yes	New	No
Data organization	Yes	Yes	No

Depth of Features

- Speed, determinism
- Diagnostics
- Vertical
- PROFIenergy
- PROFIsafe
- I-Device
- Shared Device
- Wireless
- More
- Security (common problem and solution)

PROFIsafe: How it works

PROFIsafe provides correct transmission of messages

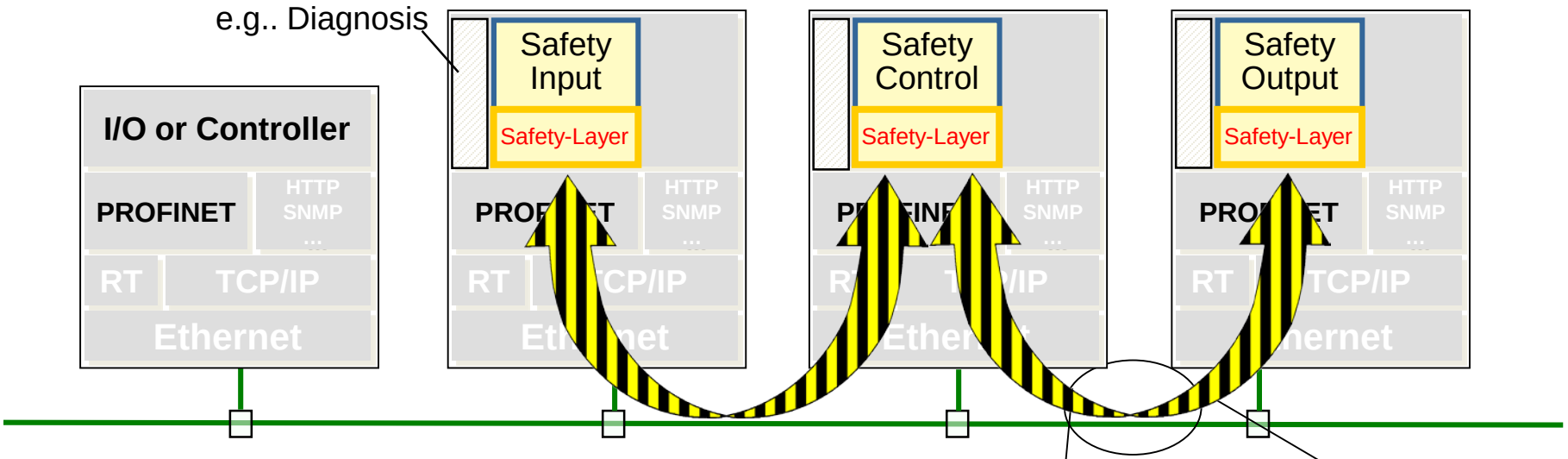

"Black Channel": ASICs, Links, Cables, etc. are not safety relevant

Non safety critical functions, like e.g. diagnosis

"**PROFIsafe**": Parts of the safety critical communications systems: Addressing, Watch Dog Timers, Sequencing, Signature, etc.

Safety relevant, but not part of the PROFIsafe-Profiles: Safety I/O and the Safety Control Systems

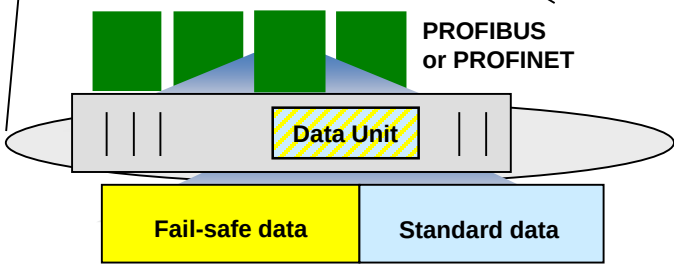

Competitive comparison

System	PROFINET	EtherNet/IP	Modbus TCP
Functional Safety	Yes	Yes	No
Safety for discrete, process, and motion	Yes	No	No
Integrates AS-i Safety	Yes	No	No

Depth of Features

- Speed, determinism
- Diagnostics
- Vertical
- PROFIenergy
- PROFIsafe
- I-Device
- Shared Device
- Wireless
- More
- Security (common problem and solution)

How do I integrate controllers?

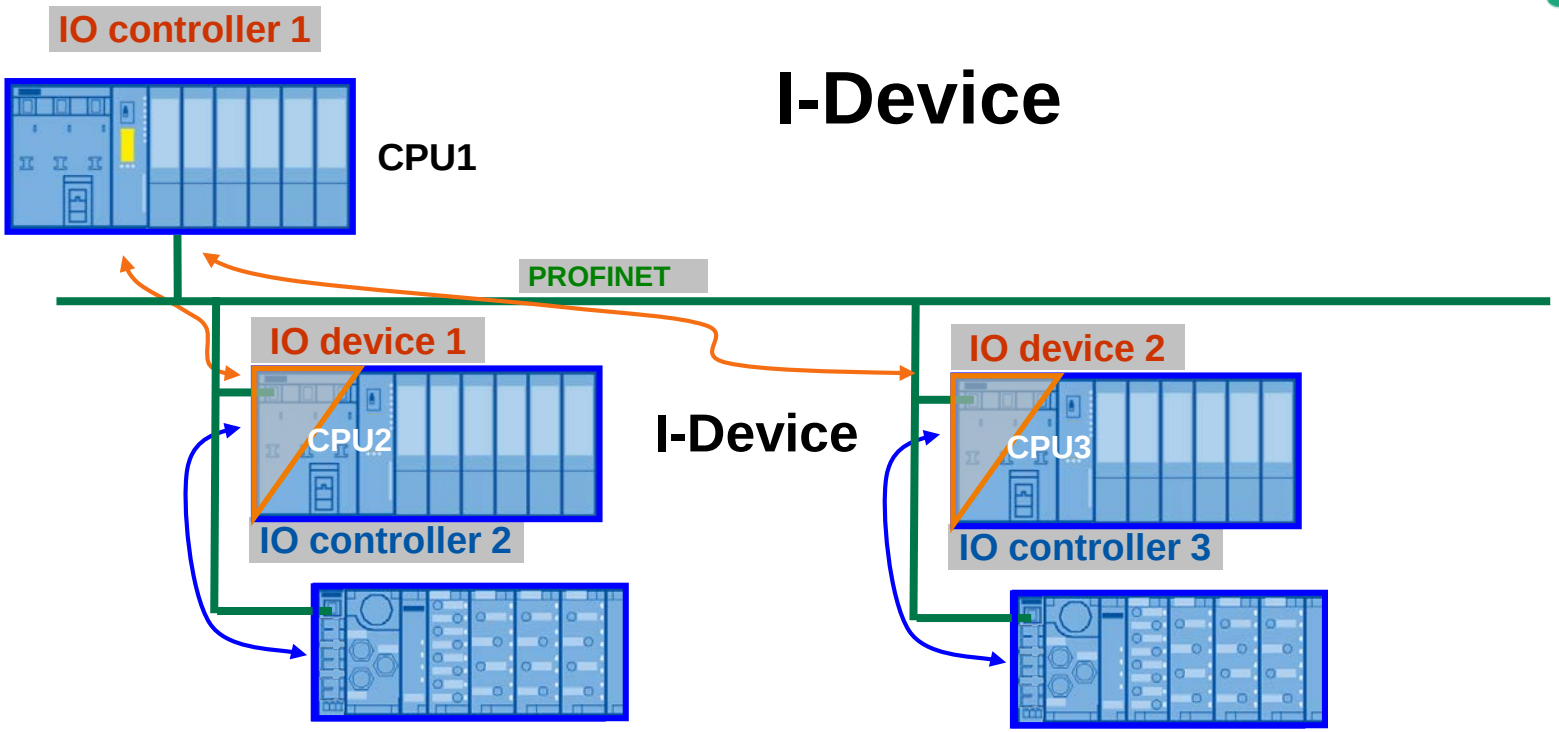

- An IO controller can also be an IO device with IO controller functionality on the same interface
- Allow local controllers in a modular architecture to communicate to a higher level station (main controller)
- Familiar IO access, without TCP/IP telegrams or proprietary methods
- Simple and familiar IO interfacing of CPUs
- Interfacing of CPUs in different projects
- Integration among different controllers (manufacturers)
- Transmission of cyclic data (RT, IRT)

Depth of Features

- Speed, determinism
- Diagnostics
- Vertical
- PROFIenergy
- PROFIsafe
- I-Device
- Shared Device
- Wireless
- More
- Security (common problem and solution)

Share an IO Device

- PROFINET offers shared device functionality
  - Two Controllers can access the same device
  - Flexible assignment of modules to different controllers

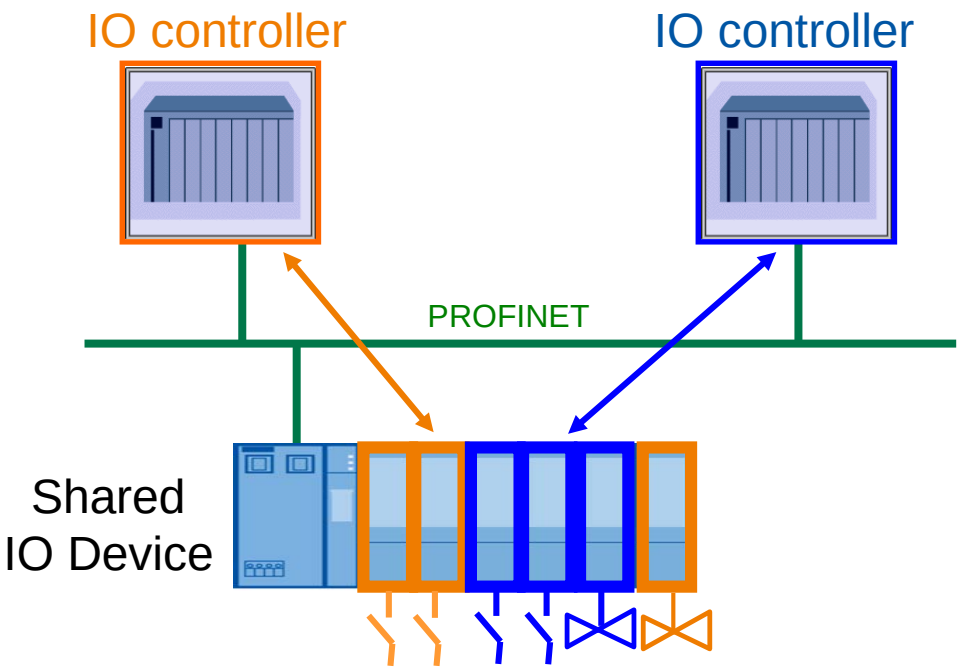

Shared device results in reduced costs, simplified architectures, can save on cabinet space, allowing optimized solutions

Depth of Features

- Speed, determinism
- Diagnostics
- Vertical
- PROFIenergy
- PROFIsafe
- I-Device
- Shared Device
- Wireless
- More
- Security (common problem and solution)

Wireless

- Long distance (RTU)
  - Long distances
  - Water/wastewater and oil patch applications
  - No standards
- Process Instruments
  - Short distances, battery powered, mesh
  - WirelessHART, ISA 100.11a
- Discrete Sensors and Actuators
  - Short distances, line-powered, mesh
  - Standards still evolving
- Backbone
  - Medium distances
  - Long-established standards

RTU = Remote Terminal Unit

PROFIBUS & PROFINET gateways to WirelessHART

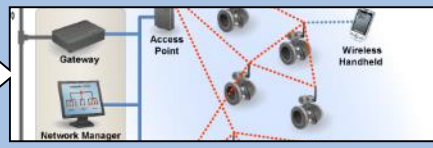

PI developed a standard

PROFINET uses this

PROFINET over wireless backbones

- PROFINET runs over these standard wireless technologies:
  - IEEE 802.11 (b,g,a,h,n,ac) – Wireless LAN
  - IEEE 802.15.1 – Bluetooth
- Wireless is part of the PROFINET specification
  - Many vendors
  - Some IO devices have wireless built in
- PROFIsafe is safety-certified over wireless using PROFINET as the transport mechanism

Competitive Comparison: wireless

- PROFINET – designed in, safety included
- EtherNet/IP – multicasting complicates

Depth of Features

- Speed, determinism
- Diagnostics
- Vertical
- PROFIenergy
- PROFIsafe
- I-Device
- Shared Device
- Wireless
- More
- Security (common problem and solution)

More

- Bumpless Redundancy
- Fast Start Up
- iPar Server
- Proxies
- Unmanaged switches
- Application Profiles for
  - Lab, trains, pumps, SEMI, robots, …

Depth of Features

- Speed, determinism
- Diagnostics
- Vertical
- PROFIenergy
- PROFIsafe
- I-Device
- Shared Device
- Wireless
- More
- Security (common problem and solution)

Security

- PI and ODVA have security documents
- Both rely on protecting the network itself

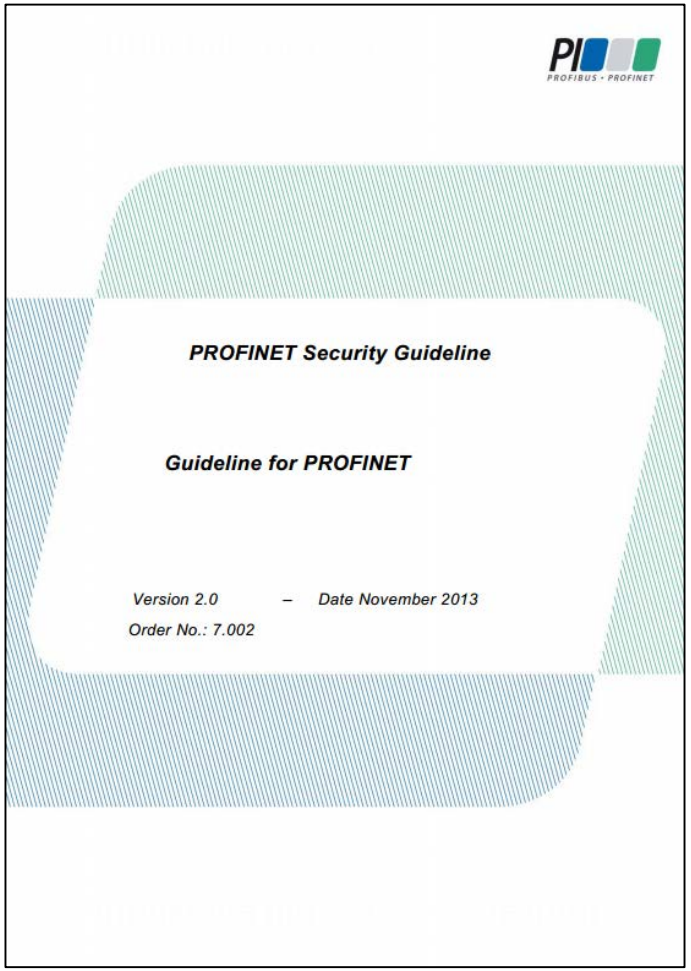

PROFINET Security Guideline

Guideline for PROFINET

Version 2.0 – Date November 2013

Order No.: 7.002

Leadership

- PI created
  - Functional safety over the network using the black channel approach
  - Energy management covering production pauses and data organization
- PI advocated 2-port switches in devices when ODVA said it was a bad idea
- PI was first with redundant media, controllers, and devices

PROFIBUS • PROFINET
NORTH AMERICA

Wrapping Up

PROFI Interface Center
PROFINET & PROFIBUS

PROFINET IS COFFEE

I
S

C
O
F
F
E
E

Industrial

- **I**ndustrial
  Scalable

  Complete
  Open
  Fast
  Flexible
  Easy
  Ethernet

- Not PROFIBUS wrapped in TCP/IP
- Designed for industry from start
  - Fast
  - Robust
  - Deterministic

Scalable (Don't Fence Me In)

Industrial
- Scalable

Complete
Open
Fast
Flexible
Easy
Ethernet

- Don't settle for an 80% solution
- Eventually you will need more
  - Motion Control
  - Process Instrument
  - Safety over the bus
  - Connectivity to a production system
- And that will require:
  - New bus
  - New software ↑$
  - New training
- So…start with the 100% solution PROFINET

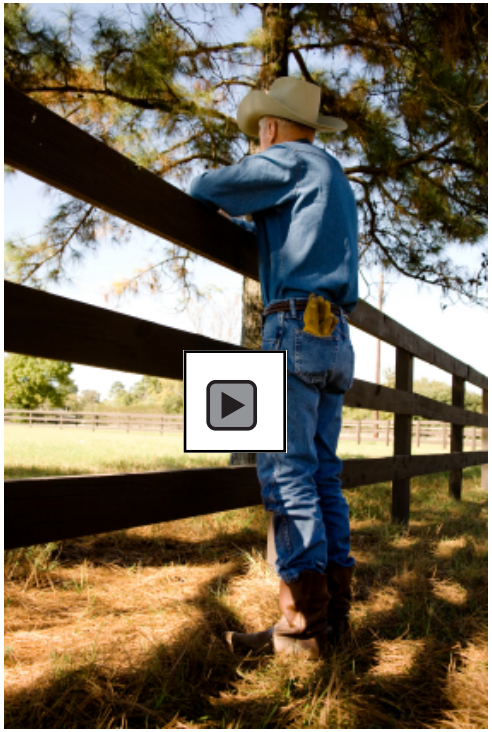

Complete

- Finished (stable)
  - Spec at version 2.3 for 2 years
  - Work on “objects” continues
- All application areas
  - Discrete, process, motion, high speed
- Depth of features
  - Diagnostics
    - PROFIBUS-like + IT protocols
  - Functional safety
  - Energy management
  - Fast startup
  - … many more

Open

Industrial
Scalable

Complete
• Open
Fast
Flexible
Easy
Ethernet

- Created and maintained by PI; not by any one company
- PI members participate in Working Groups and as reviewers
- Membership not required to make products
- No contract to sign

PROFIBUS • PROFINET

Fast

Industrial
Scalable

Complete
Open
• Fast
Flexible
Easy
Ethernet

- How fast?
  - TCP/IP
    - seconds
  - Process instruments
    - 100's of milliseconds
  - Factory IO
    - ~10 milliseconds
  - Motion control
    - <1 millisecond
  - High speed IO, motion
    - 31.25 microseconds

How repeatable?

seconds

10's of milliseconds

<1millisecond

<1microsecond

called "jitter"

PROFINET® covers this whole range

Flexible

Industrial
Scalable

Complete
Open
Fast
- Flexible
Easy
Ethernet

- Start with PROFINET
  - Virtually unlimited address space
  - Lots of bandwidth
  - Standard wireless
  - Future-proof leveraging of Ethernet
  - Connectivity upwards
  - Connectivity peer-to-peer
  - Connect directly to IO
- For specialized needs:
  - Unusual device: PROFIBUS to PROFINET
  - Intelligent sensor: IO-Link to PROFINET
  - Simple sensor: AS-i to PROFINET
  - Process instrument: PROFIBUS PA (or FF) to PROFINET
  - Wireless process instrument: WirelessHART to PROFINET
  - Wireless discrete sensor: PI WSAN to PROFINET
  - Legacy fieldbus: Proxy to PROFINET
  - Legacy instrument: HART to PROFINET


Applied Automation

COVER STORY

Fieldbus in the field

If you still connect devices and controllers with point-to-point wiring, it's time to take a look at one of the fieldbus networking options available. An appropriate selection will save money now and later.

By Carl Hensing, PI North America

In factory automation there are lots of buses to choose from. Buses are only networking protocols, so don't let what may at first seem to be a baffling array of options stop you from choosing one, or several. Don't install point-to-point wiring just because that's what you've always done. There are many benefits to using buses. And by benefits, we mean saving money.

Let's take a look at some of the bus protocols with some guidance on making the right choices.

Industrial Ethernet is the top-of-mind networking protocol these days and rightly so, but there are places it does not fit well. For example, it makes no sense to connect a limit switch to an industrial Ethernet network. But a new automation project today should begin with industrial Ethernet and then add appropriate fieldbus and sensor/actuator networks at lower levels as needed.

What is industrial Ethernet?

Industrial Ethernet leverages commercial Ethernet and adds speed, determinism, and ruggedness. In non-hazardous areas, industrial Ethernet often replaces the older serial fieldbuses. If you think of a typical office environment, Email can be delivered in a few seconds or even minutes, but a command to turn off a factory conveyor better be delivered in milliseconds or else product may pile up on the floor. In addition to speed in the factory world, commands need to be delivered in a repeatable timeframe, which is determinism. An Ethernet switch from your local computer retailer may work electrically for industrial Ethernet, but it is unlikely to be rugged enough to survive physically in a hot, humid, oily environment on the plant floor.

The most used industrial Ethernet protocols today are Profinet, EtherNet/IP, EtherCAT, and Modbus TCP. A recent market survey showed that the installed base is roughly one-third each for Profinet, EtherNet/IP, and the others.

What is a fieldbus?

There are three general kinds of device-level networks, discrete and process fieldbuses, and sensor/actuator networks. The division is based on the types of devices they communicate with and the types of data they carry. All three types typically connect a group of devices to a single controller or higher network. All provide a digital, serial, two-way, multi-drop communication link among controllers and devices.

"Fieldbuses are divided by the types of devices they communicate with and the types of data they carry."

Discrete

Discrete fieldbuses connect digital I/O to controllers. For factory (discrete manufacturing) applications in North America, Profibus DP and DeviceNet are the two most popular choices. Other choices include Interbus and CC-Link (7. Discrete fieldbuses communicate with devices such as:

- Motor controllers;
- VFDs;
- Encoders;
- Process instruments;
- Machine vision devices; and
- Other devices that generate complex data.

Such devices are normally externally powered, however DeviceNet can also carry power.

Process

Process fieldbuses are designed to communicate with process instruments and actuators. The two most common are Profibus PA and Foundation Fieldbus (FF). Process fieldbus deployments began in oil refineries and chemical plants where there are often huge populations of devices, but adoption has spread into many more areas such as water treatment and pharmaceutical manufacturing. Process devices with fieldbus connectivity include:

- Flowmeters;
- Pressure sensors;
- Level sensors;
- Control valves; and
- Temperature sensors.

Both process fieldbuses carry power to the devices and are designed to operate safely in hazardous environments. This is a major advantage where there is potential for fire or explosions.

Process and discrete fieldbuses are similar in that they can carry the same types of data. In fact, in some plants, a discrete fieldbus network may be used with process instrumentation, however this requires external powering.

Easy

Industrial
Scalable

Complete
Open
Fast
Flexible
• Easy
Ethernet

- Simple Device Replacement
- Easy configuration
- Automatic topology
- Automatic timing calculations

Ethernet (Standard Unmodified)

- Standard Unmodified Ethernet
  - Conforms to IEEE802.3
- Media includes
  - Copper
  - Fiber
  - Wireless
- Uses standard Ethernet switches*

Industrial Ethernet Capability Matrix

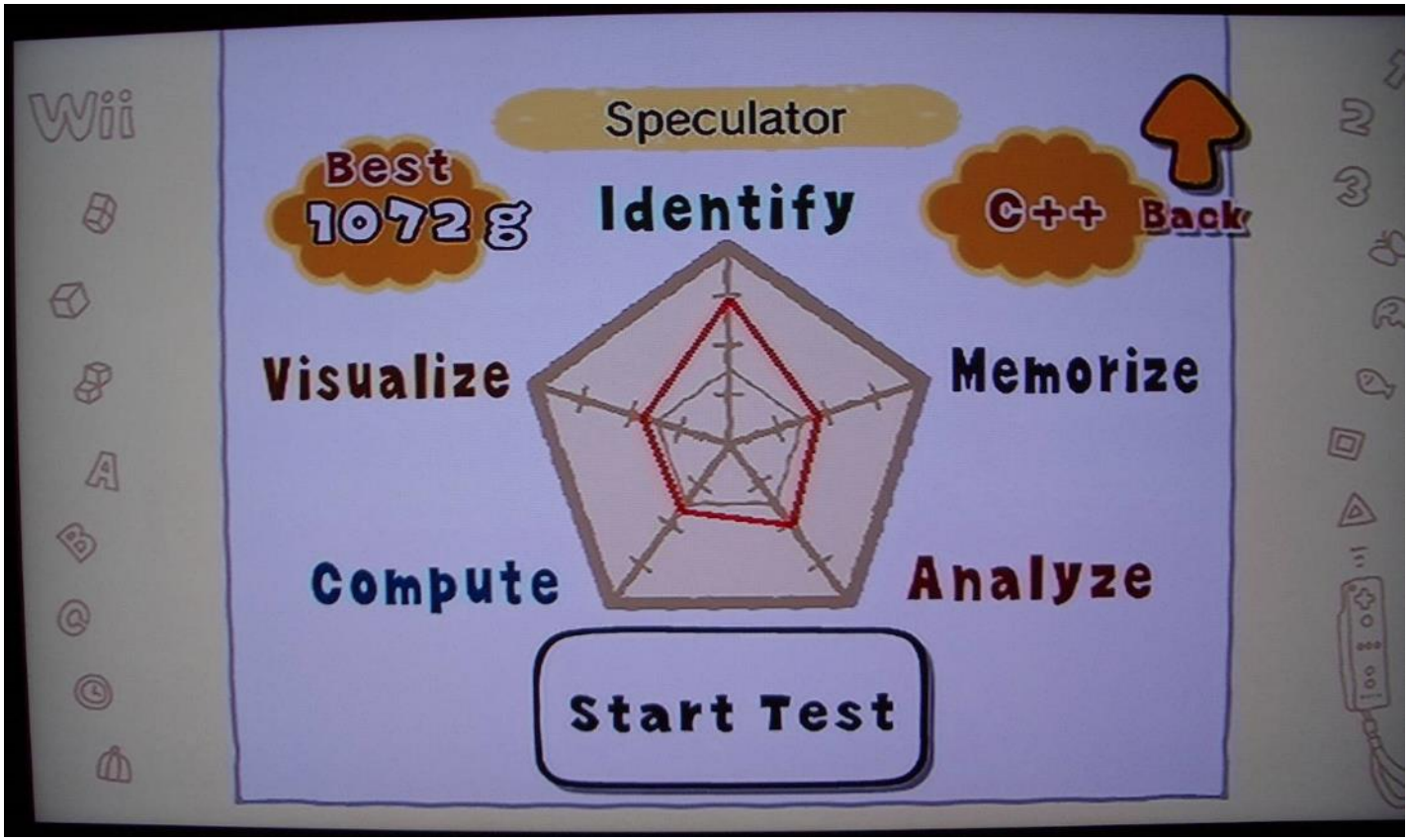

Industrial Ethernet Capability Matrix

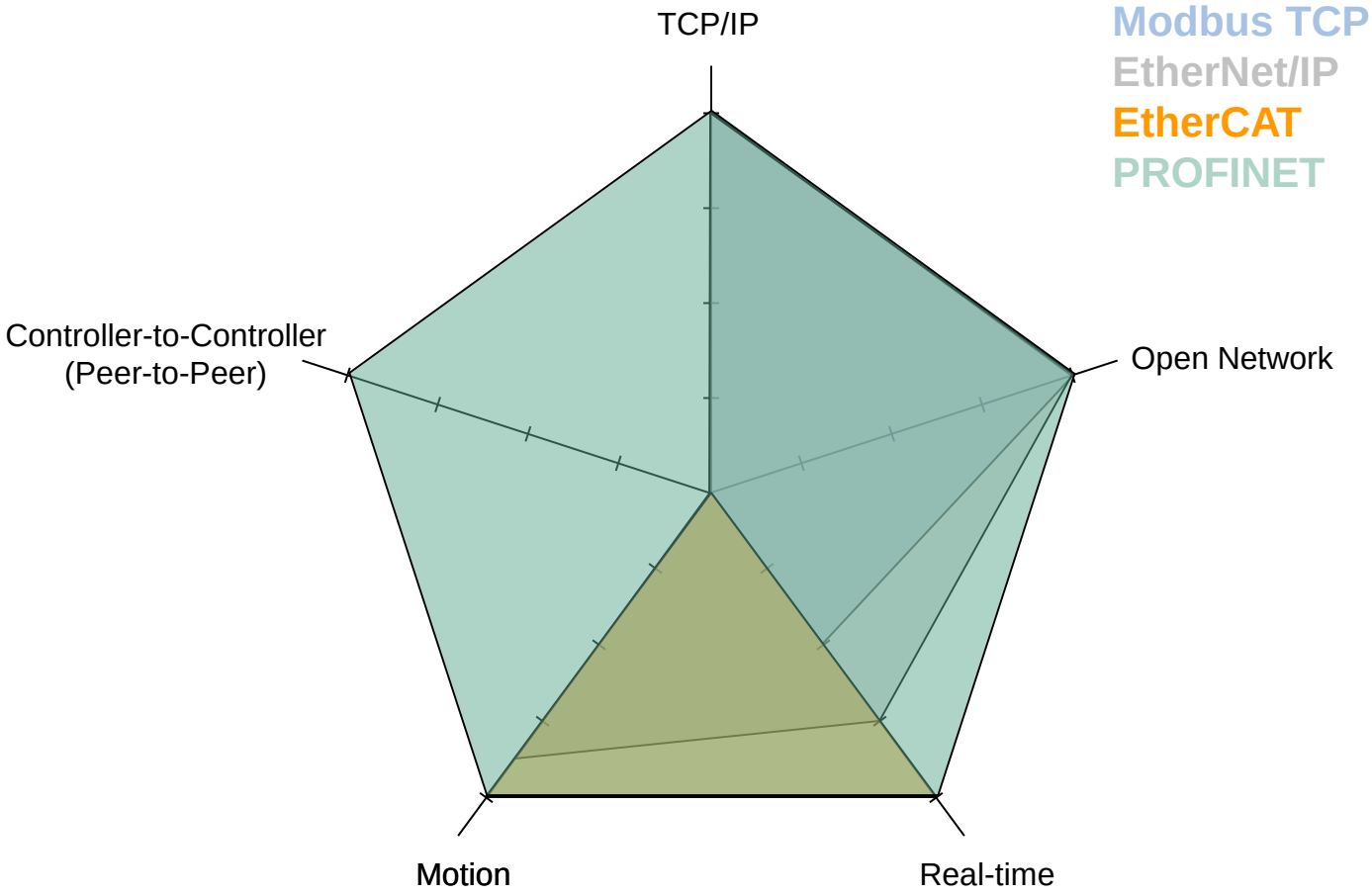

Industrial Ethernet Functionality

Technology	PROFINET	Ethernet/IP	Modbus TCP
Ethernet IO	Y	Y	Y
Motion Control	Y	Y	N
Peer-to-peer	Y	Y	N
Process profile	Y	N	N
Safety	Y	Y	N
Security Guideline	Y	N	N
Buses integrated	many*	DeviceNet ControlNet	Modbus

source: organization websites

Y = shipping N = no plans known

*Available= PROFIBUS DP, PROFIBUS PA, Interbus, DeviceNet, Serial, Modbus, AS-i, HART, IO-Link, FF
Planned= CC-Link, more

Industrial Ethernet Functionality

Technology	PROFINET	EtherNet/IP	Modbus TCP
Communication Model	Provider-Consumer	Provider-Consumer	Client-Server
Real-time Protocol Options	IEEE 802.3 (Layer 2) primary, UDP/IP option, TCP/IP option	UDP/IP (Layer 4)	TCP/IP (Layer 4)
Jitter with IO	++ (low)	- (high)	-- (higher)
Protocol Standard	IEC 61158	IEC 61158	IEC 61158
Transmission Type	Unicast primary, Multicast optional	Multicast primary, Limited Unicast	Unicast only
COTS switch possible?	Yes	Not recommended	Yes
Switch requirements	100Mbit/s or faster, full duplex for IO traffic	Full Duplex IGMP Snooping, One IGMP Query, Wire speed For IO traffic	No special requirements
IP Address Assignment	Automatic w/ PN DCP DHCP optional	DHCP and Managed	DHCP and Managed

Industrial Ethernet Functionality

Technology	PROFINET	EtherNet/IP	Modbus TCP
Device Names	Mandatory	Optional	Optional
Simple Device Replacement	Yes, no tools, support in all devices	No, DHCP Option 82 Managed, Need special switch/server with DHCP Option 82 support	No
Network Management	(DCP, DHCP option, SNMP, LLDP, topology, options, naming concept, comprehensive diagnostics)	(DHCP, bootP, DHCP option 82, SNMP loop holes, vendor specific, limited network diagnostics, special switches very likely)	(limited to IT tools, SNMP loop holes, vendor specific, no built in network functions)
Comprehensive Diagnostics	Yes, Application and Network	No	No
Diagnostics IO Status	Yes	No, IO only	No
Diagnostics Network Browser (can find IP or naming issues)	Yes, returns all PROFINET Devices and information	Limited to IT or vendor tools no common tool	Limited to IT or vendor tools no common tool

Industrial Ethernet Functionality

Technology	PROFINET	EtherNet/IP	Modbus TCP
Diagnostics Topology	Yes	No	No
SNMP loop holes	No	Yes	Yes
Energy Management (PROFIenergy)	Yes	No	No
Safety	Yes	Yes	No
Fast Start Up	Yes	Yes	No
Wireless	Yes, IEEE 802.11 and Bluetooth	Yes, IEEE 802.11 (with caution when using multicast)	Yes
Performance	++	-	--
Automatic Timing Calculation	Yes	No	No
Fieldbus Integration	Many, including non PI networks (PROFIBUS, Interbus, ASI, DeviceNet, Foundation Fieldbus, Modbus, Hart, etc.)	CompoNet, DeviceNet, ControlNet, Modbus TCP	Modbus

Industrial Ethernet Functionality

Technology	PROFINET	EtherNet/IP	Modbus TCP
Media (Network) Redundancy	Yes SP, RSP, PN MRP, bumpless IRT, vendor specific	Yes SP, RSP, DLR, vendor specific	Yes SP, RSP, vendor specific
Bumpless Redundancy	Yes	No	No
Controller Redundancy	Yes	Not on EtherNet/IP, Only with additional ODVA networks and hardware	No
Device Redundancy	Yes	No	No
Vertical Integration	Yes	No	No
Devices can report maintenance information	Yes	No	No
Peer to Peer communications	Yes with CBA, I-Device, PN/PN Couplers, TCP/UDP option for programmed communication	Yes only TCP/IP, programmed communication	Yes only TCP/IP, programmed communication

Industrial Ethernet Functionality

Technology	PROFINET	EtherNet/IP	Modbus TCP
PROFINET for PA (Process Automation)	Yes	No	No
Shared Device	Yes	No	No
iPar (optional parameter server)	Yes	No	No
TCI – Tool Calling Interface (allows vendor tools to be entered from the PROFINET configuration / engineering tool)	Yes	No	No

Phoenix Contact PROFINET Strengths

- Organizational
  - Active since beginning
    - Developing PROFINET
    - Continuing in Working Groups
  - On Board of Directors of PI North America
- Products
  - Developed PROFINET ASIC
  - PROFINET IO
  - PROFINET controllers
  - Ethernet switches that are PROFINET IO devices
  - Redundancy of media and controllers

PROFIBUS • PROFINET
NORTH AMERICA

Resources

PROFI Interface Center
PROFINET & PROFIBUS

Competitive Resources from the PROFIblog

- Pegging the FUD Meter (8/27/07)
- The Fickle Finger of FUD* (10/30/07)
- FUD Dissection Part 1
- FUD Dissection Part 2
- Responding to FUD with FCN
- The Big Lie: SUE (12/17/08)
- The EtherNet/IP FUD-sicle – Melted Again (7/31/12)

www.us.profinet.com

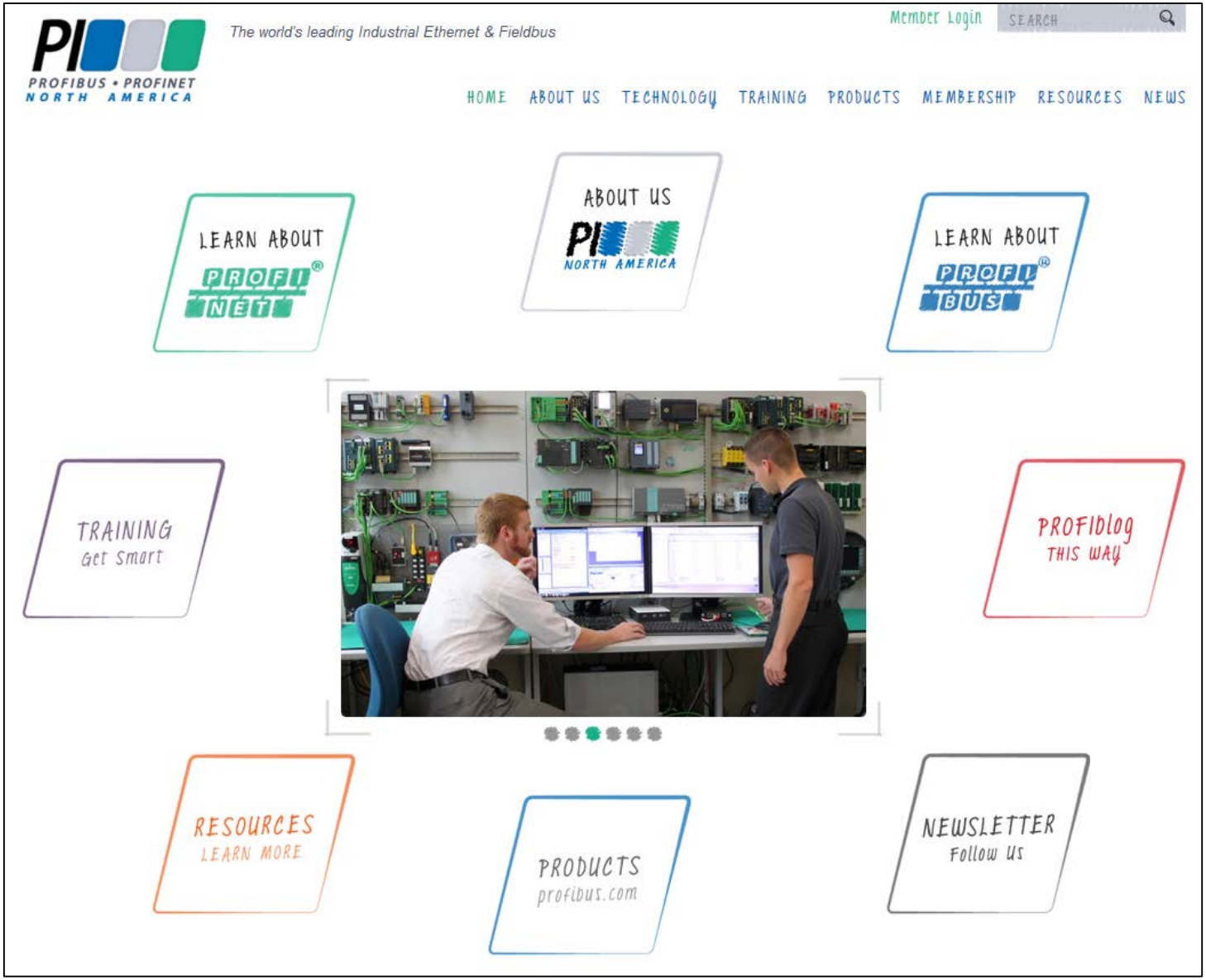

Resources: PROFINEWS App

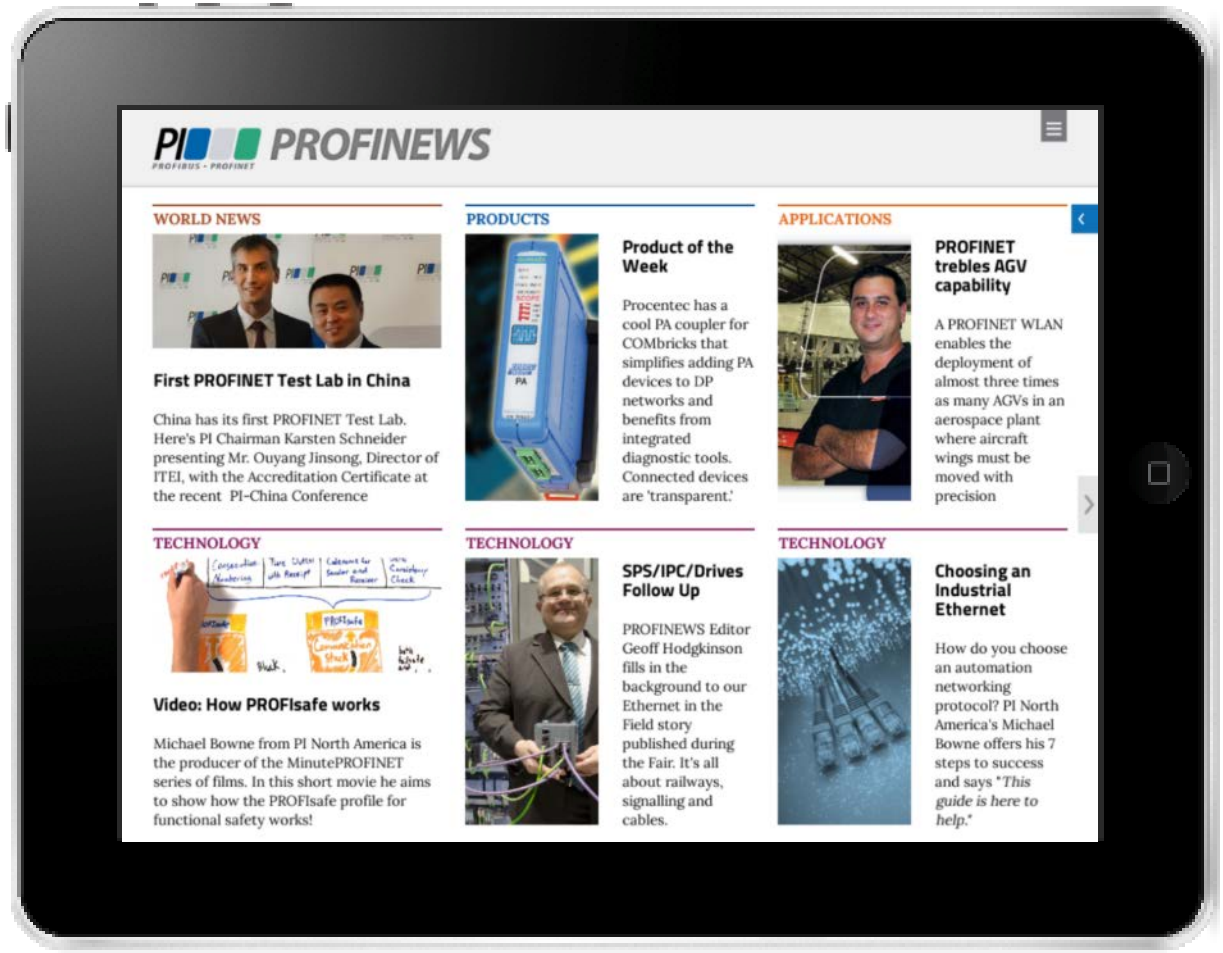

Resources: Newsletter

- PROFINEWS.com

PROFINEWS

PROFIBUS & PROFINET news from around the world

Contact | Imprint

HOME | APPLICATION STORIES | TECH TIPS | TRAINING / EVENTS | PRODUCT NEWS | PI NEWS | MEMBER NEWS | REGIONAL NEWS

Welcome

November 10, 2014 | Written by Carl Henning

In only a few days the SPS/IPC/Drives Show will open its doors in Nuremberg. One highlight of this year's booth will be a new manufacturing model that clearly demonstrates the technologies. The model was designed and built in a cooperative partnership with the TU Darmstadt and will include PROFINET products from many different vendors. For ex [...]

READ MORE

PI Booth at SPS/IPC /Drives Show

November 10, 2014 | Written by Carl Henning

sps ipc drives

PI (PROFIBUS & PROFINET International) and 100 of its members will present devices and technologies on all aspects of PROFIBUS, PROFINET, and IO-Link at the SPS/IPC/Drives trade fair in Nuremberg, Germany. PI will be part of Europe's leading exhibition for electrical automation at a new location in hall 2, stand 220 and 221. From November [...]

READ MORE

Popular Articles

- Industrial Internet of Things
- New Products (Issue 121)
- Tech Tip: PROFINET's Got Class
- Newsletter Merger
- Training and Events (Issue 121)

Issues

- Issue122
- Issue121

Technology Partners

Resources: Webinars

- Introduction to Ethernet for Control Engineers
- PROFINET
- Industrial Wireless
- Industrial Ethernet Diagnostics
- PROFIBUS in the Process Industries
- PROFIsafe
- PROFIenergy
- Completing a PROFINET Project

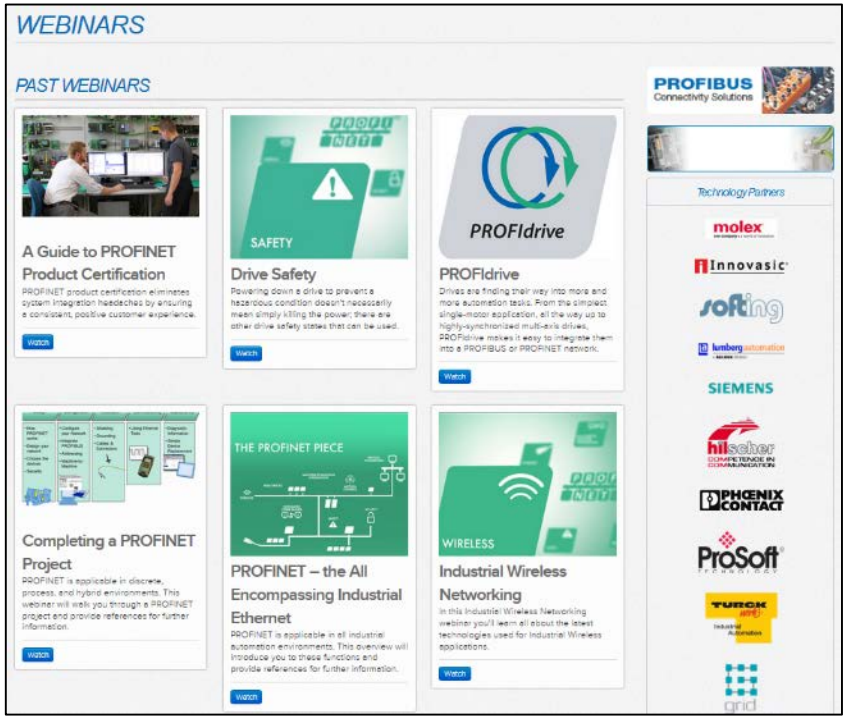

More

Resources: One-day training classes

PROFINET
Los Angeles, Feb 3
Dallas, Feb 19
Atlanta, Mar 4
Houston, Mar 19
Richmond, Apr 2
St. Louis, Apr 16
Newark, Apr 28
Pittsburgh, May 14

PROFINET
Denver, June
Minneapolis, June 4
Chicago, Aug
Tampa, Oct
Detroit, Oct
Louisville, Nov
Raleigh, Nov
Seattle, Dec

For the latest schedule and to register visit
www.us.profinet.com

Resources: PROFItech Classes

- PROFIBUS or PROFINET Certified Network Engineer class
  - Full week in Johnson City, TN
  - Also available on-site
  - Theoretical plus hands-on
  - Certification requires passing both a theoretical and practical exam
  - Certified Network Engineers are listed at www.profibus.com
  - Details at certified.ProfiInterfaceCenter.com
  - Register online

PROFINET Developer Workshop

- Provide background and knowledge to **design and test a PROFINET product efficiently.**
- How PROFINET can **meet the specific application's needs** (ex. GSDML file development).
- **Tailored** to customer's level of experience and education. Builds upon the **PROFINET Certified Network Engineer** curriculum.
- Hands-on experience and expert instruction on how to use the **PROFINET test software suite**.
- Small or large groups accommodated, both at the PIC or on the customer's site.

Resources: Books

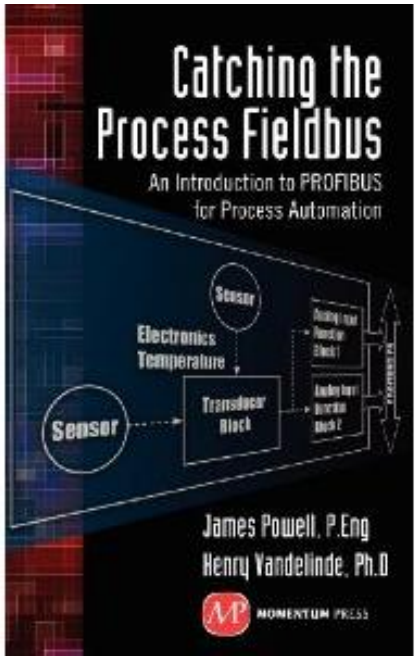

Order

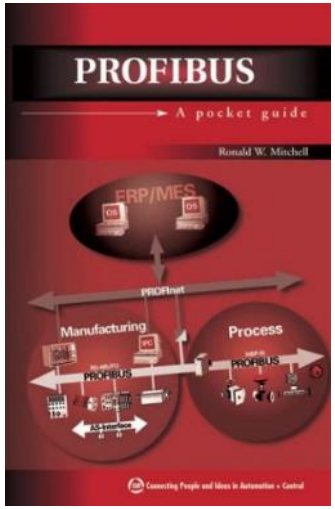

Order

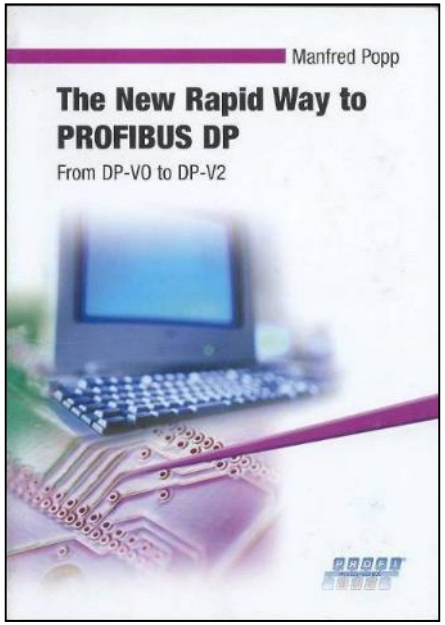

Order

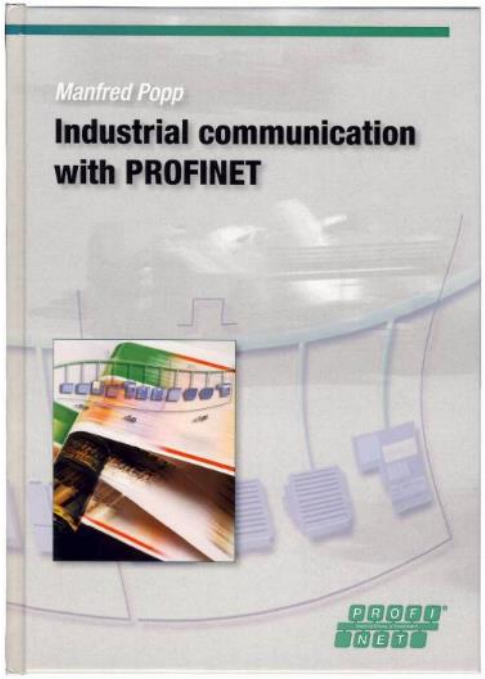

Order

Resources: Social Media

PROFItelevision

MinutePROFINET

ThePROFIblogger

Resources: People

PI North America
16101 N 82nd Street
Suite 3B
Scottsdale, AZ 85260 USA
ph: (480) 483-2456
fax: (480) 483-7202
www.us.profibus.com

Michael Bryant, Executive Director
Carl Henning, Deputy Director
Michael Bowne, Director of Tech Mkting
Lynne Froehlich, Administrative Director
Marsha Bryant, Administrator

PROFI Interface Center
One Internet Plaza
Johnson City, TN 37604 USA

ph: (423) 262-2576
fax: (423) 262-2103
www.ProfiInterfaceCenter.com

Torsten Paulsen, PIC Manager
Hunter Harrington, PROFINET Consulting Engr
Kyle McMillan, PROFINET Systems Engineer
John Swindall, PROFIBUS Systems Engineer

PROFIBUS • PROFINET
NORTH AMERICA

PROFI
Interface Center
PROFINET & PROFIBUS